YAMAHA

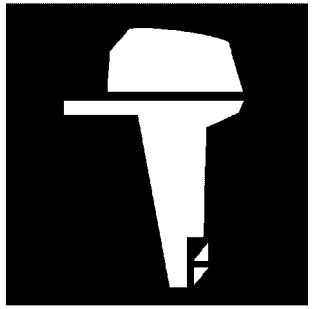

PARTS CATALOGUE
CATALOGO DE REPUESTOS

F150DET'16 (63PE)
FL150DET'16 (64PE)

YAMAHA
GENUINE
Parts & Accessories

1Q63P-200SA

( )

F150DET/FL150DET
PARTS CATALOGUE
©2016 by Yamaha Motor Co., Ltd.
1st edition, June 2016
All rights reserved.
Any reprinting or unauthorized use
without the written permission of
Yamaha Motor Co., Ltd.
is expressly prohibited.
Printed in Japan.

F150DET/FL150DET
CATALOGO DE REPUESTOS
©2016 por Yamaha Motor Co., Ltd.
1ª edición, junio 2016
Todos los derechos reservados.
Toda reproducción o uso no autorizado
sin el consentimiento escrito de
Yamaha Motor Co., Ltd.
quedan expresamente prohibidos
Impreso en Japón.

FOREWORD

This Parts Catalogue is related to the parts for the model(s) on the cover page. When you are ordering replacement parts, please refer to this Parts Catalogue and quote both part numbers and part names correctly.

1. Modifications or additions which have been made after the issue of the Parts Catalogue will be announced in the Parts News.
   It is advisable that you make the necessary corrections to the Parts Catalogue according to the Parts News.

2. Abbreviations
   The following abbreviations are used in this Parts Catalogue.
   "UR" Use specified parts number.
   "UN" Use as many as needed.
   "AP" Alternate Parts
   "LM" Locally Made (Parts need to be ordered locally)
   "F#" Frame No. (Applicable machine No.)
   "O/S" Over Size

3. The number of components for assembly
   - Parts, which are to be supplied in an assembly, are listed with a dot (.) in front of the part name as shown below.
   - The numeral appearing to the right of each component part indicates the quantity of parts for each assembly unit.

PART NO.	DESCRIPTION	Q'TY	REMARKS
2F5–83310–60	FRONT FLASHER LIGHT ASSY	2	
115–83311–60	.BULB (6V–18W)	1	

4. Applicable colours of graphics are represented in the "REMARKS" as shown below.

PART NO.	DESCRIPTION	Q'TY	REMARKS
2N4–24110–00–X5	FUEL TANK COMP.	2	MXR
3J1–24240–10	.GRAPHIC, FUEL TANK	1	FOR MXR

5. Note that the illustrations for reference in finding parts numbers are not to be used for assembling. When assembling, please use the applicable service manual.

6. The asterisk (*) before a reference number indicates modified items after the first edition.

7. Applicable Serial No.
   Engine Serial No.

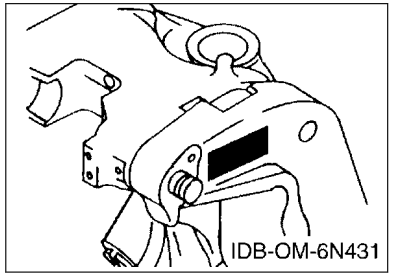

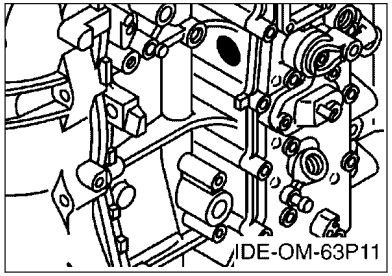

8. Applicable Engine Starting Serial No.

Model	Serial No.	Model	Serial No.
F150D	63P-1171292	FL150D	64P-1019246

9. Applicable Colour Code

Abbreviation	Colour Name	Colour Code
DBN1	DARK BLUISH GRAY 1	008D

10. Quantity Column Information

Column No.	Name Of Q'ty Column	Applicable Model
1	63PE	F150DET
2	64PE	FL150DET

PROLOGO

Este catálogo de repuestos corresponde a las piezas para el o los modelos que figuran en la página de portada. Al formular el pedido de repuestos, se ruega citar este catálogo y especificar correctamente el número y el nombre de las piezas.

1. Las modificaciones y agregados que se hayan realizado después de la edición de este Catálogo de Repuestos, serán anunciados en las Informaciones de Recambios.
   Es recomendable que se hagan las correcciones necesarias en el Catálogo de Repuestos de acuerdo con las Informaciones de Recambios.

2. Abreviaciones
   En este. Catálogo de Repuestos se emplean las siguientes abreviaciones.
   "UR" Usar el número de partes especificado
   "UN" Usar la cantidad necesaria
   "AP" Piezas sustitutivas
   "LM" Fabricación local (Hay que pedir los repuestos en las cercanías)
   "F#" Nº de bastidor (Nº aplicable a la máquina)
   "O/S" Sobredimensionado

3. La cantidad de componentes para el montaje
   - Los componentes, suministrados como conjunto, se describen con un punto (.) que precede al nombre del parte como se indica a continuación.
   - La numeración que aparece a la derecha de cada descripción indica la cantidad de partes por cada unidad de conjunto.

CODIGO Nº	DESCRIPCION	CANT.	OBSERVACIONES
2F5–83310–60	ENSAMBLAJE DE LA LUZ	2	
115–83311–60	.BOMBILLA (6V–18W)	1	

4. Los colores de los componentes se indican como sigue en la columna de "OBSERVACIONES".

CODIGO Nº	DESCRIPCION	CANT.	OBSERVACIONES
2N4–24110–00–X5	COMP. DEL TANQUE	2	MXR
3J1–24240–10	.GRAFICO, DEL TANQUE	1	PARA MXR

5. Debe tenerse en cuenta que las ilustraciones sirven como guia para la búsqueda de los números de partes y no deben usarse para el montaje. Durante el montaje, se recomienda usar el manual de taller correspondiente.

6. EL asterisco (*) antes del número de referencia indica los elementos modificados después de la primera edición.

7. Números de serie
   Nº de Serie del motor

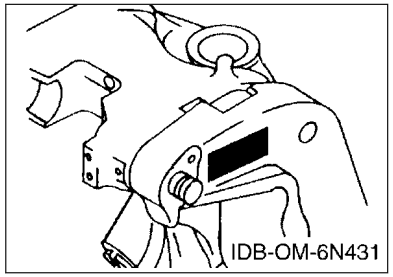

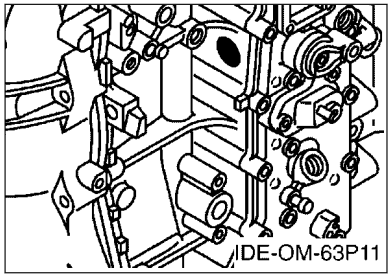

8. Números de serie del motor

Modelo	Nº de serie	Modelo	Nº de serie
F150D	63P-1171292	FL150D	64P-1019246

9. Códigos de color aplicables

Abreviatura	Nombre de color	Código de color
DBN1	DARK BLUISH GRAY 1	008D

10. Informacion para la columna de cantidades

Columna Nº	Nombre de la columna de cantidades	Modelo aplicable
1	63PE	F150DET
2	64PE	FL150DET

CONTENTS

SCHEDULED SERVICE PARTS....1
TOP COWLING....2
CYLINDER & CRANKCASE 1....3
CRANKSHAFT & PISTON....5
CYLINDER & CRANKCASE 2....6
CYLINDER & CRANKCASE 3....8
VALVE....10
INTAKE 1....13
INTAKE 2....14
INTAKE 3....15
FUEL INJECTION PUMP 1....17
FUEL INJECTION PUMP 2....19
FUEL 1....20
FUEL 2....22
GENERATOR....23
ELECTRICAL 1....25
ELECTRICAL 2....26
ELECTRICAL 3....28
STARTING MOTOR....30
BOTTOM COWLING 1....32
BOTTOM COWLING 2....34
CONTROL....35
BRACKET 1....37
BRACKET 2....39
POWER TRIM & TILT ASSY 1....41
POWER TRIM & TILT ASSY 2....44
UPPER CASING....45
OIL PAN....47
LOWER CASING & DRIVE 1....48
LOWER CASING & DRIVE 2....52
LOWER CASING & DRIVE 3....54
LOWER CASING & DRIVE 4....58
STEERING GUIDE....60
REMOTE CONTROL BOX....61
REMOTE CONTROL ASSY 1....62
REMOTE CONTROL ASSY 2....65
REMOTE CONTROL ASSY 3....68
METER 1....71
METER 2....72
SWITCH & PANEL 1....73
SWITCH & PANEL 2....74
OPTIONAL PARTS 1....75
OPTIONAL PARTS 2....76
OPTIONAL PARTS 3....77
OPTIONAL PARTS 4....78
OPTIONAL PARTS 5....79
OPTIONAL PARTS 6....80
REPAIR KIT 1....81
REPAIR KIT 2....82

INDEX

NUMERICAL INDEX....84

CONTENIDO

PARTES DE REPUESTO TEMPORALES..... 1
SOPORTE SUPERIOR..... 2
CILINDRO & CARTER 1..... 3
CIGUENAL & PISTON.....5
CILINDRO & CARTER 2..... 6
CILINDRO & CARTER 3..... 8
VALVULA.....10
ADMISION 1.....13
ADMISION 2.....14
ADMISION 3.....15
BOMBA DE INYECTOR 1..... 17
BOMBA DE INYECTOR 2..... 19
COMBUSTIBLE 1.....20
COMBUSTIBLE 2.....22
GENERADOR.....23
EQUIPO ELECTRICO 1..... 25
EQUIPO ELECTRICO 2..... 26
EQUIPO ELECTRICO 3..... 28
MOTOR DE ARRANQUE.....30
CUBIERTA INFERIOR 1..... 32
CUBIERTA INFERIOR 2..... 34
CONTROL..... 35
SOPORTE 1..... 37
SOPORTE 2..... 39
COMPONER Y PODER VARILLA 1.....41
COMPONER Y PODER VARILLA 2.....44
FUNDA SUPERIOR.....45
OIL PAN.....47
IMPULSOR E INFERIOR 1..... 48
IMPULSOR E INFERIOR 2..... 52
IMPULSOR E INFERIOR 3..... 54
IMPULSOR E INFERIOR 4..... 58
DIRECCIONGUIAR..... 60
CONTROL REMOTO COMPLETO..... 61
CONTROL REMOTO COMPL 1.....62
CONTROL REMOTO COMPL 2.....65
CONTROL REMOTO COMPL 3.....68
MEDIDOR 1.....71
MEDIDOR 2.....72
PANEL DE INTERRUPTOR 1.....73
PANEL DE INTERRUPTOR 2.....74
PARTES OPCIONALES 1.....75
PARTES OPCIONALES 2.....76
PARTES OPCIONALES 3.....77
PARTES OPCIONALES 4.....78
PARTES OPCIONLES 5..... 79
PARTES OPCIONALES 6.....80
ESTUCHE REPARATION 1..... 81
ESTUCHE REPARATION 2..... 82

INDICE

INDICE NUMERICO.....84

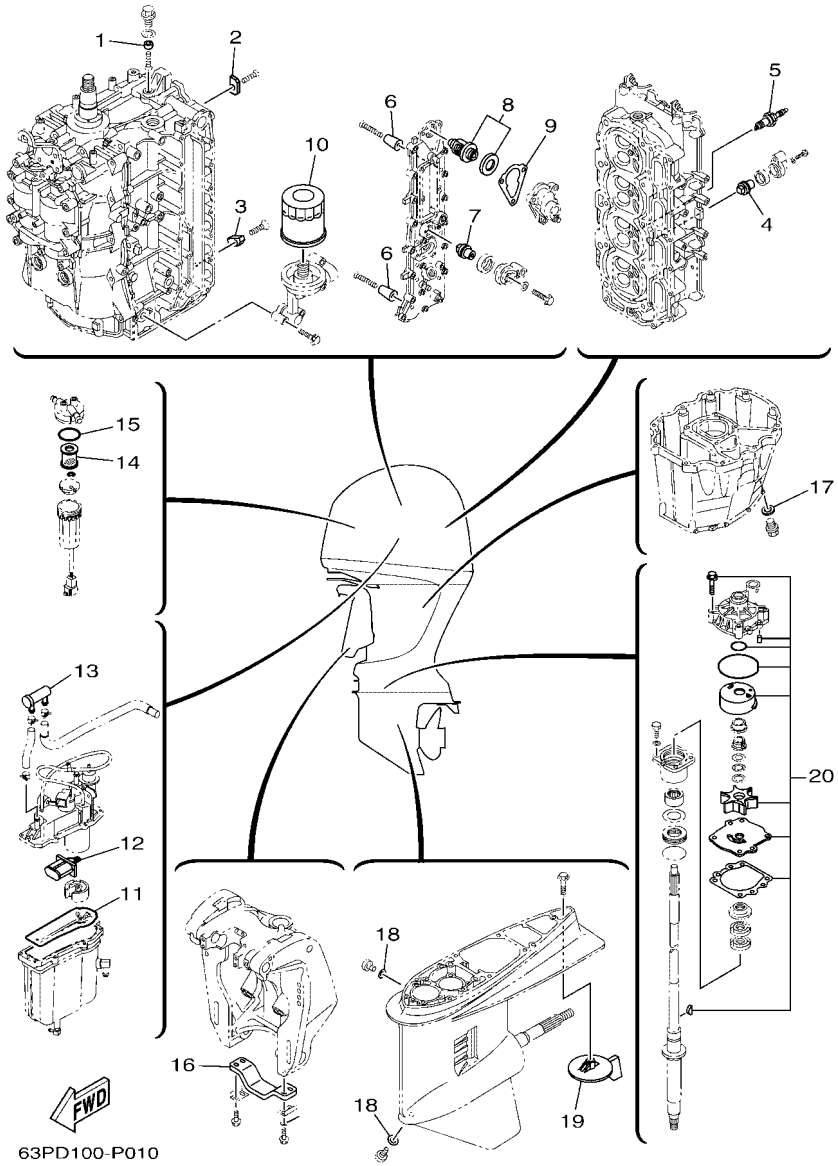

FIG. 1 SCHEDULED SERVICE PARTS — PARTES DE REPUESTO TEMPORALES

REF. NO.	PART NO. CODIGO Nº	DESCRIPTION DESCRIPCION	63PE	64PE				REMARKS OBSERVACIONES
1	63P–11325–21	ANODE ANODO	1	1				
2	63P–11325–11	ANODE ANODO	4	4				
3	63P–11325–01	ANODE ANODO	1	1				
4	67F–11325–01	ANODE ANODO	2	2				
5	94702–00391	PLUG, SPARK (NGK LFR5A-11) BUJIA (NGK LFR5A-11)	4	4				
6	68T–11325–00	ANODE ANODO	8	8				
7	67F–11325–01	ANODE ANODO	1	1				
8	67F–12411–01	THERMOSTAT TERMOSTAT	1	1				
9	63P–12414–00	GASKET, COVER EMPAQUE	1	1				
10	69J–13440–03	ELEMENT ASSY, OIL CLEANER ELEMENTO FILTRO DE ACEITE	1	1				
11	63P–14984–00	GASKET, FLOAT CHAMBER EMPAQUE CAMARA DE BOIA	1	1				FOR CAR,CSA FOR CAR,CSA
	63P–14984–10	GASKET, FLOAT CHAMBER EMPAQUE CAMARA DE BOIA	1	1				FOR BRA FOR BRA
12	63P–13915–00	FILTER FILTRO	1	1				
13	69J–24501–10	FILTER, FUEL FIELTRO	1	1				
14	6P3–24563–01	ELEMENT, FILTER ELEMENTO DEL FILTRO	1	1				
15	6P3–24564–00	GASKET EMPAQUE	1	1				
16	6G5–45251–02	ANODE CATODE	1	1				
17	90430–14M09	GASKET JUNTA	1	1				
18	90430–08003	GASKET JUNTA	2	2				
19	6J9–45371–01	TAB-TRIM QUILLA ESTABILIZADOR	1					
	6K1–45371–02	TAB-TRIM QUILLA ESTABILIZADOR		1				
20	61A–W0078–A3	WATER PUMP REPAIR KIT ESTUCHE REPARACION BOMBA AGUA	1	1				

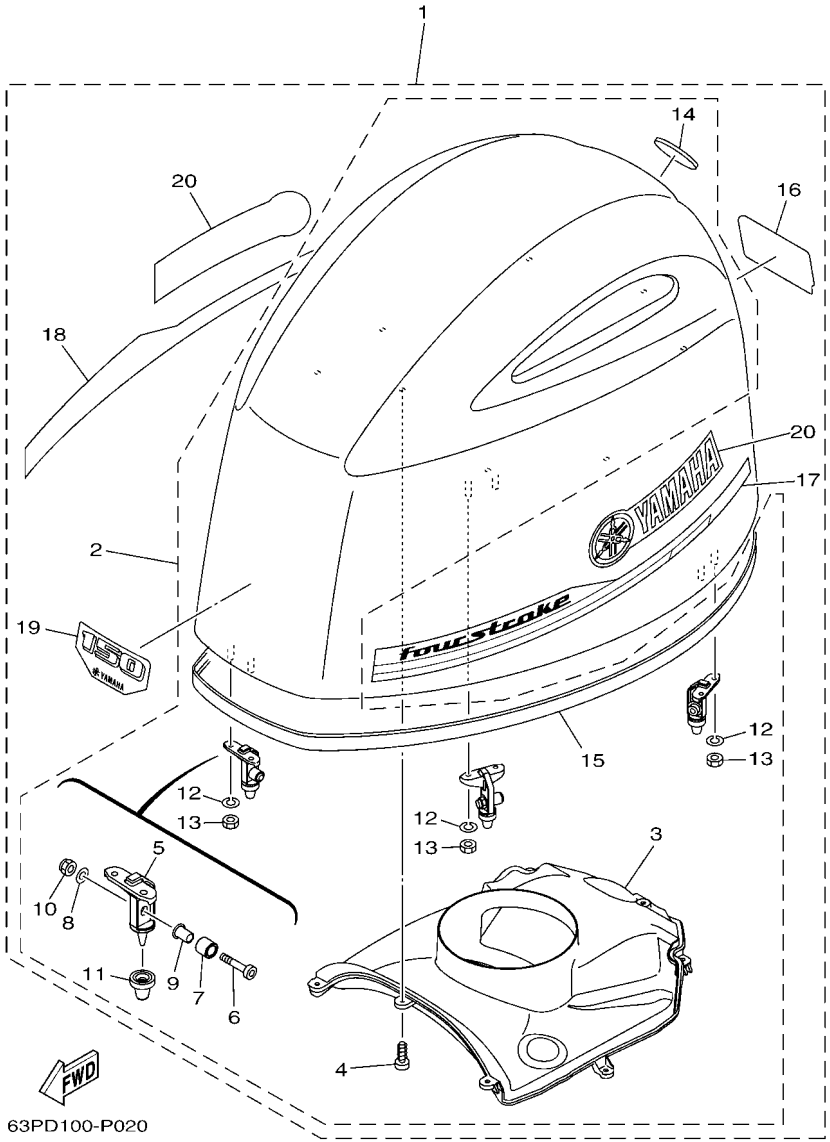

FIG. 2 TOP COWLING — SOPORTE SUPERIOR

REF. NO.	PART NO. CODIGO Nº	DESCRIPTION DESCRIPCION	63PE	64PE				REMARKS OBSERVACIONES
1	63P–42610–70	TOP COWLING ASSY SOPORTE SUPERIOR COMPL.	1	1				
2	63P–4261A–10	.TOP COWLING W/O GRAPHICS .SOPORTE SUPERIOR SIN GRAFICOS	1	1				
3	6DA–42613–00	..MOLDING, AIR DUCT ..MOLDURA CONDUCTO AIRE	1	1				
4	90167–05017	..SCREW, TAPPING ..TORNILLO DE ROSCA HEMBRA	8	8				
5	6CB–42647–A0	..HOLDER, CLAMP BAND ..MORDAZA DE ABRAZADERA	3	3				
6	90111–08078	..BOLT,HEX. SOCKET BUTTON ..TORNILLO	3	3				
7	90387–10094	..COLLAR ..ESPACIADOR	3	3				
8	92990–08600	..WASHER, PLATE ..ARANDELA PLANA	3	3				
9	90387–08M45	..COLLAR ..ESPACIADOR	3	3				
10	95780–08300	..NUT, FLANGE ..TUERCA	3	3				
11	6AW–42663–00	..DAMPER ..AMORTIGUADOR 2	3	3				
12	92990–06100	..WASHER, SPRING ..ARANDELA PLANA	6	6				
13	95380–06600	..NUT, HEXAGON ..TUERCA	6	6				
14	6DA–42697–00	..TUNING FORK MARK ..MARCA, YAMAHA	1	1				
15	6CB–42628–00	..SEAL ..SELLO DE GOMA	1	1				
16	63P–42678–60	.GRAPHIC, REAR .CALCAMONIA TRASERA	1	1				
17	6DA–42675–00	.GRAPHIC, SIDE 1 .CALCAMONIA LATERAL 1	1	1				
18	6DA–42676–00	.GRAPHIC, SIDE 2 .CALCAMONIA LATERAL 2	1	1				
19	63P–42677–60	.GRAPHIC, FRONT .CALCAMONIA FRONTAL	1	1				
20	63P–42681–20	.MARK, COWLING .MARCA DE CUBIERTA	2	2				

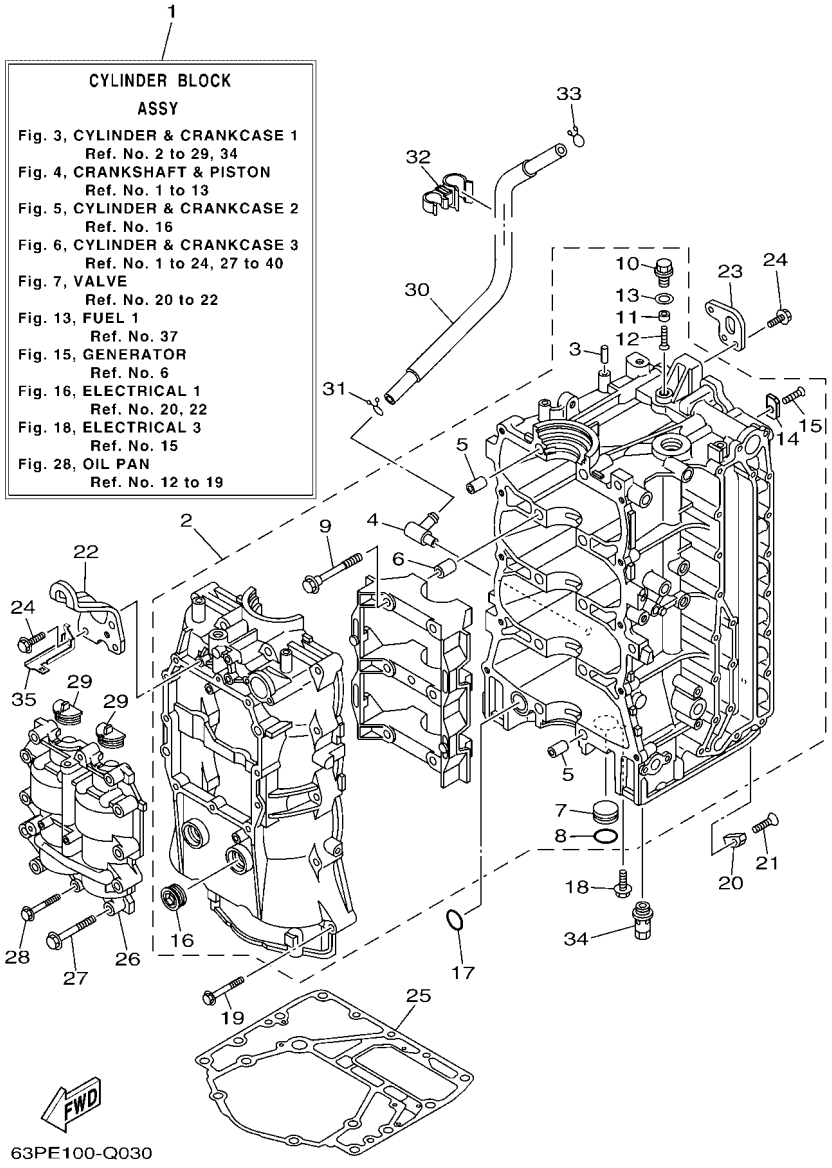

FIG. 3 CYLINDER & CRANKCASE 1 — CILINDRO & CARTER 1

REF. NO.	PART NO. CODIGO Nº	DESCRIPTION DESCRIPCION	63PE	64PE				REMARKS OBSERVACIONES
1	63P–W009B–12–9S	CYLINDER BLOCK ASSY CYLINDRO BLOQUE COMPLETO	1	1				
2	63P–W1510–04–9S	CRANKCASE ASSY CARTER COMPLETO	1	1				
3	93606–12019	.PIN, DOWEL .PASADOR DE CLAVIJA	1	1				
4	63P–11372–00	.NIPPLE, HOSE .NIPLE DE MANGUERA	1	1				
5	91814–18002	.PIN, DOWEL .PASADOR DE CLAVIJA	4	4				
6	91814–18002	.PIN, DOWEL .PASADOR DE CLAVIJA	6	6				
7	90338–25004	.PLUG .TAPON	1	1				
8	93210–25647	.O-RING .ANILLO O	1	1				
9	90105–10071	.BOLT, FLANGE .TORNILLO	10	10				
10	63P–11197–A0	.PLUG, BLIND .TAPON CIEGO	1	1				
11	63P–11325–21	.ANODE .ANODO	1	1				
12	98780–05016	.SCREW, FLAT HEAD .TORNILLO CABEZA PLANA	1	1				
13	90430–14115	.GASKET .JUNTA	1	1				
14	63P–11325–11	.ANODE .ANODO	4	4				
15	90151–06M02	.SCREW, COUNTERSUNK .TORNILLO EMBUTIDO	4	4				
16	90340–27129	.PLUG, STRAIGHT SCREW .TORNILLO, DE DRENAJE	2	2				
17	93210–25552	O-RING ANILLO O	1	1				
18	90119–06M81	BOLT, WITH WASHER TORNILLO CON ARANDELA	1	1				
19	90119–08M66	BOLT, WITH WASHER TORNILLO CON ARANDELA	10	10				
20	63P–11325–01	ANODE ANODO	1	1				
21	90151–06M02	SCREW, COUNTERSUNK TORNILLO EMBUTIDO	1	1				
22	63P–11119–00	HANGER, ENGINE SOPORTE DEL MOTOR	1	1				
23	63P–11119–10	HANGER, ENGINE SOPORTE DEL MOTOR	1	1				
24	90119–06MA2	BOLT, WITH WASHER TORNILLO CON ARANDELA	5	5				
25	63P–11351–03	GASKET, CYLINDER JUNTA, DE CILINDRO	1	1				
26	63P–11500–04	BALANCER ASSY COMPENSADOR COMPLETA	1	1				
27	90119–08M66	BOLT, WITH WASHER TORNILLO CON ARANDELA	10	10				

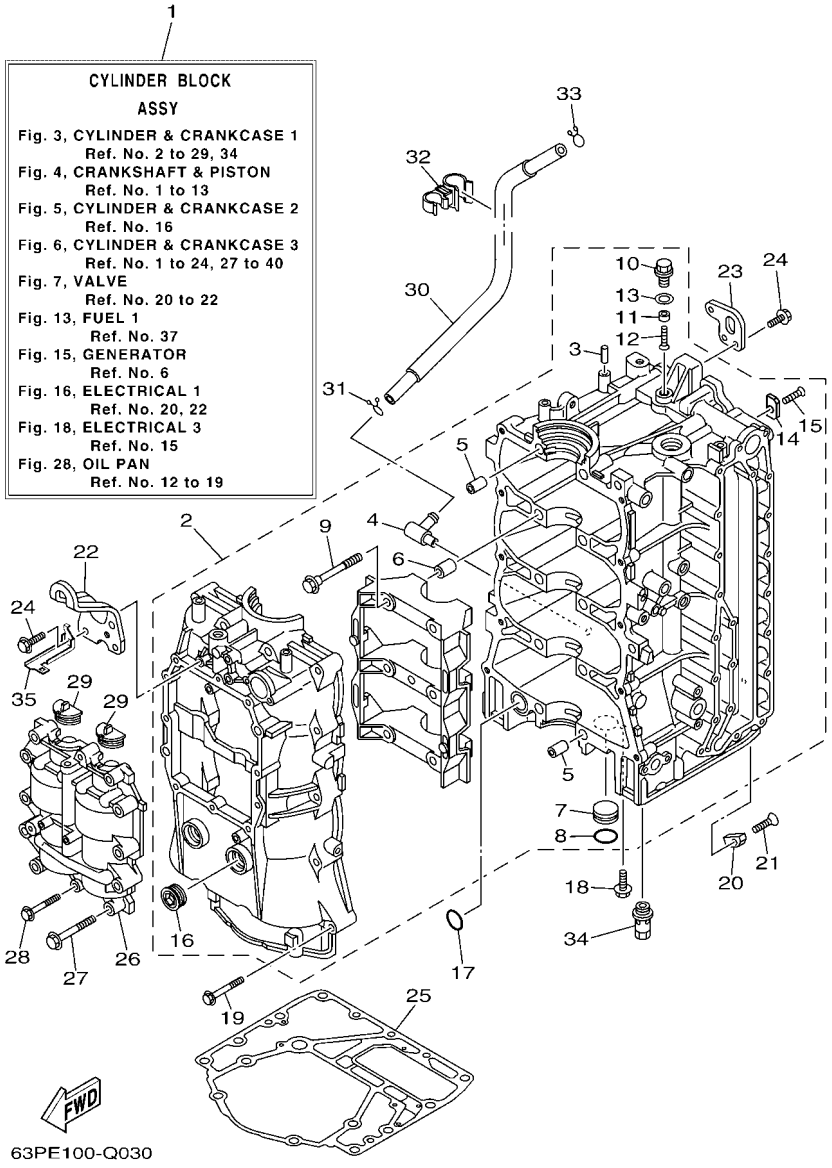

FIG. 3 CYLINDER & CRANKCASE 1 — CILINDRO & CARTER 1

REF. NO.	PART NO. CODIGO Nº	DESCRIPTION DESCRIPCION	63PE	64PE				REMARKS OBSERVACIONES
28	90119–06MA6	BOLT, WITH WASHER TORNILLO CON ARANDELA	2	2				
29	63P–11512–00	SEAL, CRANK COVER SELLO CUBIERTA DE MANIVELA	2	2				
30	63P–11377–10	HOSE MANGUERA	1	1				
31	90467–15M14	CLIP PRESILLA	1	1				
32	90464–15007	CLAMP BRIDA	1	1				
33	90467–15M14	CLIP PRESILLA	1	1				
34	63P–13490–00	RELIEF VALVE ASSY VALVELA DE DESCOMPRESION	1	1				
35	63P–82588–00	PLATE PLACA	1	1				

FIG. 4 CRANKSHAFT & PISTON — CIGUENAL & PISTON

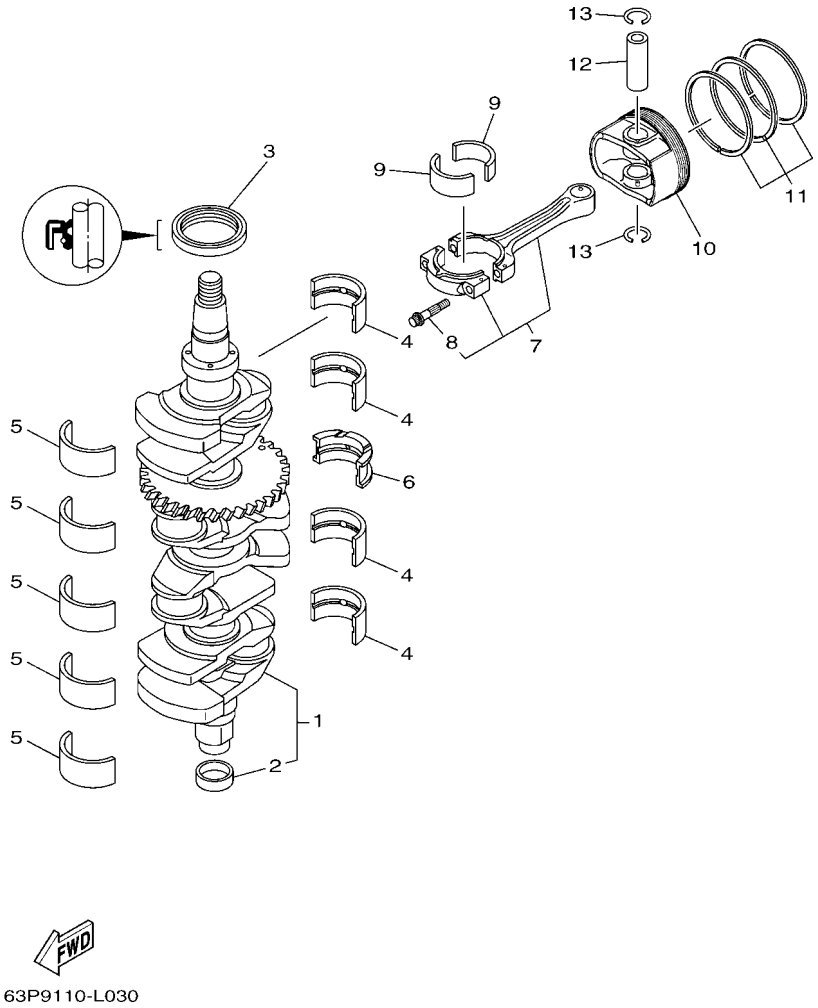

REF. NO.	PART NO. CODIGO Nº	DESCRIPTION DESCRIPCION	63PE	64PE				REMARKS OBSERVACIONES
1	63P–11410–04	CRANKSHAFT CIGUENAL	1	1				
2	6CB–11478–00	.COLLAR .COLLAR	1	1				
3	93102–60004	OIL SEAL SELLO ACEITE	1	1				
4	63P–11416–31	PLANE BEARING, CRANKSHAFT 1 COJINETE PLANO 1	4	4				UR GREEN UR VERDE
	63P–11416–41	PLANE BEARING, CRANKSHAFT 1 COJINETE PLANO 1	4	4				UR RED UR ROJO
	63P–11416–51	PLANE BEARING, CRANKSHAFT 1 COJINETE PLANO 1	4	4				UR YELLOW UR AMARILLO
5	63P–11417–41	PLANE BEARING, CRANKSHAFT 2 COJINETE PLANO 2	5	5				UR BROWN UR BROWN
	63P–11417–51	PLANE BEARING, CRANKSHAFT 2 COJINETE PLANO 2	5	5				UR GREEN UR VERDE
	63P–11417–61	PLANE BEARING, CRANKSHAFT 2 COJINETE PLANO 2	5	5				UR RED UR ROJO
	63P–11417–71	PLANE BEARING, CRANKSHAFT 2 COJINETE PLANO 2	5	5				UR YELLOW UR AMARILLO
	63P–11417–81	PLANE BEARING, CRANKSHAFT 2 COJINETE PLANO 2	5	5				UR BLUE UR AZUL
6	63P–11426–31	BEARING, THRUST 1 COJINETE DE EMPUJE 1	1	1				UR GREEN UR VERDE
	63P–11426–41	BEARING, THRUST 1 COJINETE DE EMPUJE 1	1	1				UR RED UR ROJO
	63P–11426–51	BEARING, THRUST 1 COJINETE DE EMPUJE 1	1	1				UR YELLOW UR AMARILLO
7	63P–W1165–10	CONNECTING ROD ASSY BIELA COMPLETA	4	4				
8	63P–11654–10	.BOLT, CONNECTING ROD .TORNILLO DE BIELA	2	2				
9	63P–11656–30	PLANE BEARING, CONNECTING ROD COJINETE PLANO	8	8				UR GREEN UR VERDE
	63P–11656–40	PLANE BEARING, CONNECTING ROD COJINETE PLANO	8	8				UR BLUE UR AZUL
	63P–11656–50	PLANE BEARING, CONNECTING ROD COJINETE PLANO	8	8				UR RED UR ROJO
10	63P–11631–10–93	PISTON (STD) PISTON (NORMA)	4	4				
	63P–11635–10	PISTON (0.25MM O/S) PISTON (0.25MM O/S)	4	4				AP AP
11	63P–11603–01	PISTON RING SET (STD) JUEGO DE ANILLOS (NORMA)	4	4				
	63P–11604–00	PISTON RING SET (0.25MM O/S) JUEGO DE ANILLOS (0.25MM O/S)	4	4				AP AP
12	63P–11633–10	PIN, PISTON PASADOR, PISTON	4	4				
13	63P–11634–00	CLIP, PISTON PIN PRESILLA, BULON DE PISTON	8	8				

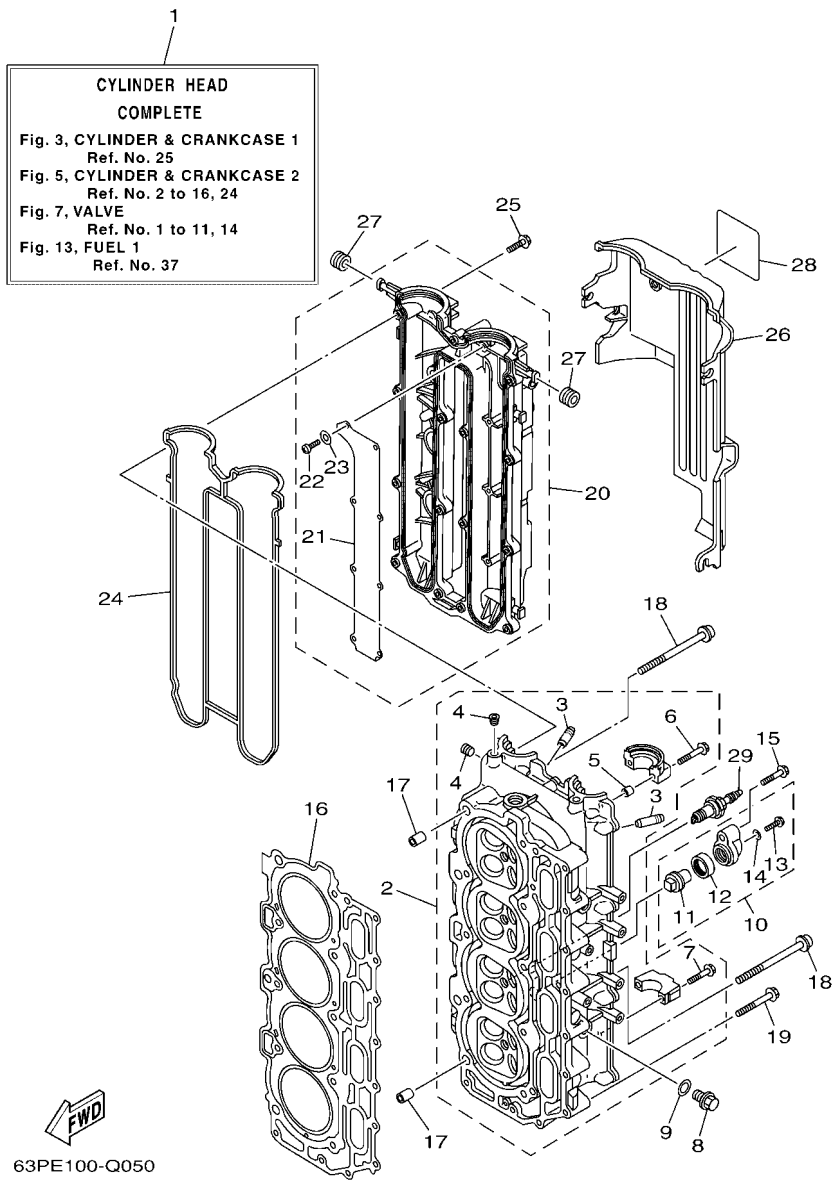

FIG. 5 CYLINDER & CRANKCASE 2 — CILINDRO & CARTER 2

REF. NO.	PART NO. CODIGO Nº	DESCRIPTION DESCRIPCION	63PE	64PE				REMARKS OBSERVACIONES
1	63P–W009A–04–9S	CYLINDER HEAD COMPLETE CILINDRD CULATA COMPLETO	1	1				
2	63P–11110–11–9S	CYLINDER HEAD ASSY CULATA DE CILINDRO COMPLETA	1	1				
3	6DA–11133–10	.GUIDE, VALVE 1 .GUIA DE VALVULA 1	16	16				
4	90344–51019	.PLUG, TAPER SCREW .TAPON DE TORNILLO AHUSADO	3	3				
5	91809–08006	.PIN, DOWEL .PASADOR DE CLAVIJA	4	4				
6	90119–07235	.BOLT/WASHER-CAM CAPS .TORNILLO CON ARANDELA	4	4				
7	90119–07234	.BOLT, WITH WASHER .TORNILLO CON ARANDELA	16	16				
8	90340–14M06	PLUG, STRAIGHT SCREW TORNILLO, DE DRENAJE	2	2				
9	90430–14115	GASKET JUNTA	2	2				
10	69J–11301–00	ANODE COVER ASSY CONJUNTO CUBIERTA DE ANODO	2	2				
11	67F–11325–01	.ANODE .ANODO	1	1				
12	67F–11328–00	.GROMMET, ANODE .TAPON	1	1				
13	90105–06M07	.BOLT, FLANGE .TORNILLO	1	1				
14	90430–06M03	.GASKET .JUNTA	1	1				
15	97575–08540	BOLT, WITH WASHER PERNO CON ARANDELA	2	2				
16	63P–11181–00	GASKET, CYLINDER HEAD 1 JUNTA, DE CULATA 1	1	1				
17	99530–14016	PIN, DOWEL PASADOR, DE ESPIGA	2	2				
18	90155–10006	SCREW, FLAT FILLISTER TORNILLO CABEZA PLANA RAN.	10	10				
19	90119–08M91	BOLT, WITH WASHER TORNILLO CON ARANDELA	10	10				
20	63P–11191–00–9S	COVER, CYLINDER HEAD 1 TAPA CULATA DE CILINDRO 1	1	1				
21	63P–11135–00	.PLATE, BREATHER 3 .PLACA RESPIRADERO 3	1	1				
22	98507–04008	.SCREW, PAN HEAD .TORNILLO DE CABEZA CON PLANA	8	8				
23	92907–04600	.WASHER .ARANDELA	8	8				
24	63P–11193–00	GASKET, HEAD COVER 1 EMPAQUE	1	1				
25	97595–06530	BOLT, WITH WASHER PERNO CON ARANDELA	13	13				
26	63P–11192–01	COVER, CYLINDER HEAD 2 TAPA CULATA DE CILINDRO 2	1	1				
27	90480–12314	GROMMET TAPON	5	5				

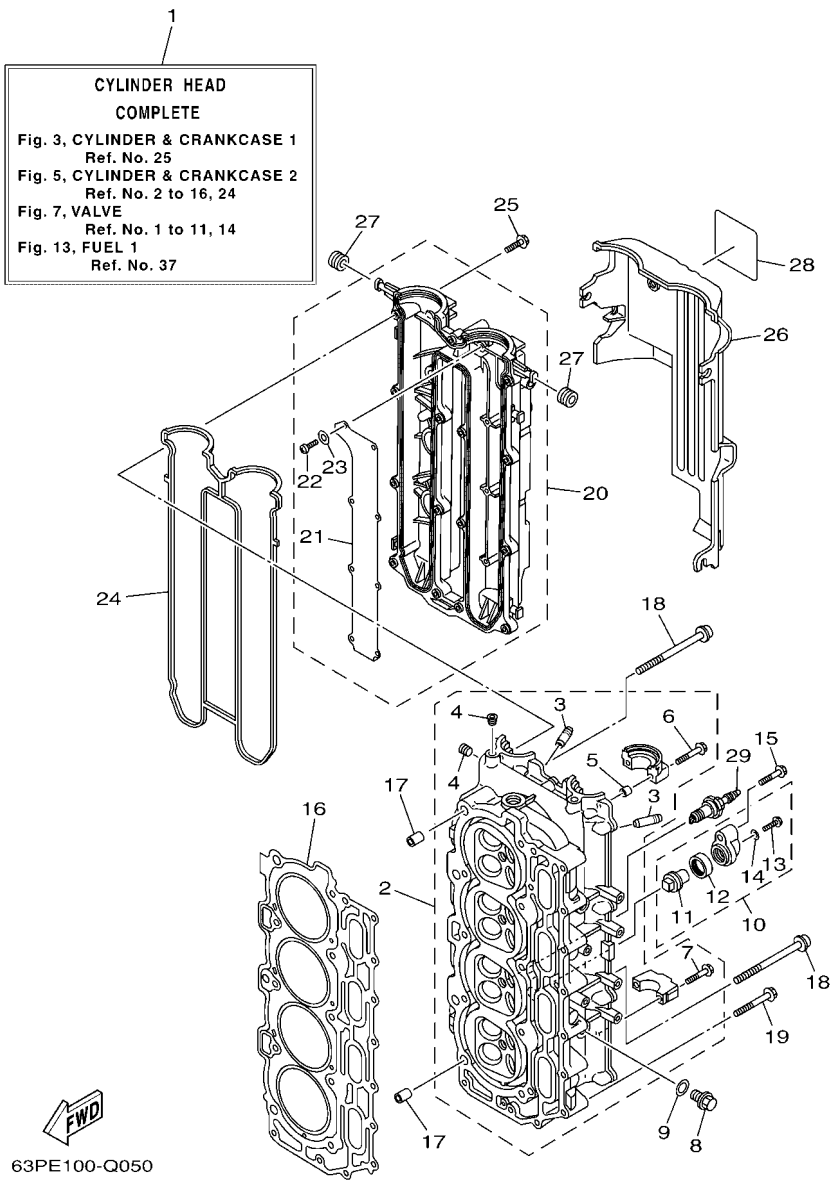

FIG. 5 CYLINDER & CRANKCASE 2 — CILINDRO & CARTER 2

REF. NO.	PART NO. CODIGO Nº	DESCRIPTION DESCRIPCION	63PE	64PE				REMARKS OBSERVACIONES
28	63P–83626–00	MARK 6 MARCA 6	1	1				
29	94702–00391	PLUG, SPARK (NGK LFR5A-11) BUJIA (NGK LFR5A-11)	4	4				

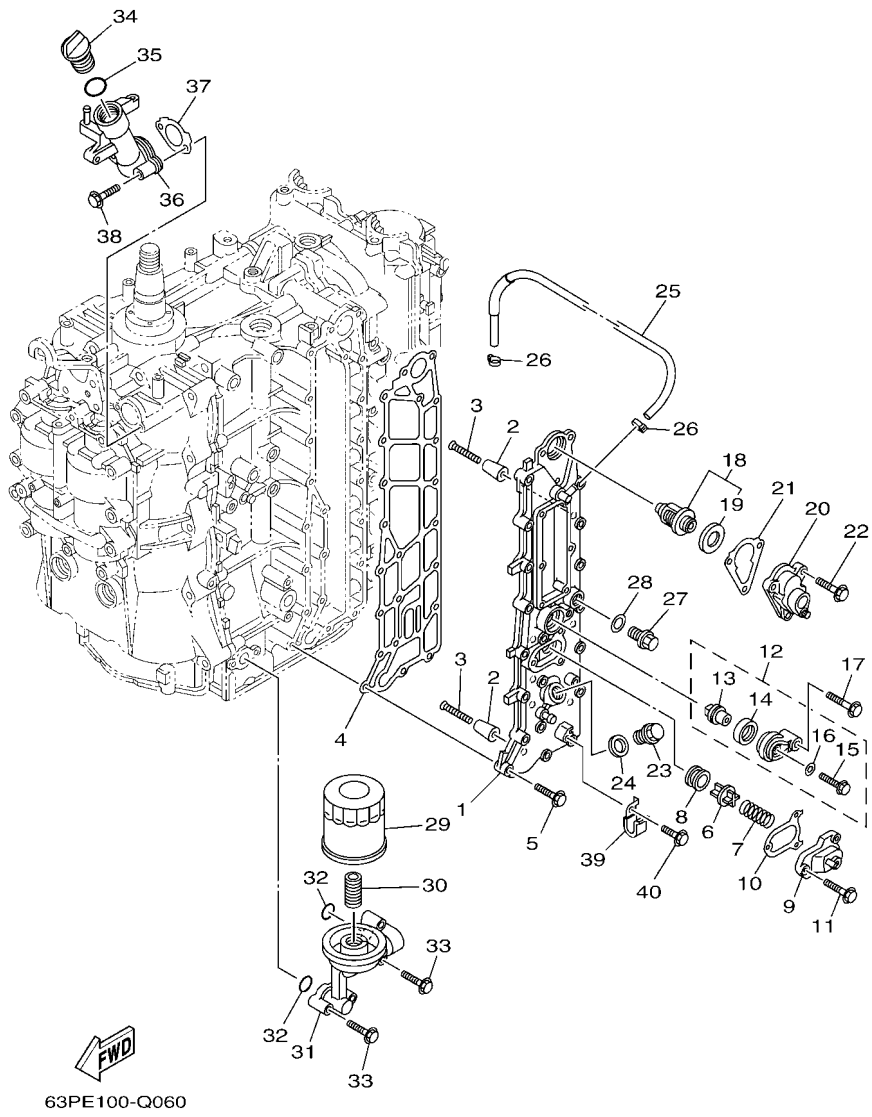

FIG. 6 CYLINDER & CRANKCASE 3 — CILINDRO & CARTER 3

REF. NO.	PART NO. CODIGO Nº	DESCRIPTION DESCRIPCION	63PE	64PE				REMARKS OBSERVACIONES
1	63P–41113–04–9S	OUTER COVER, EXHAUST CUBOERTA EXTERIOR DE ESCAPE	1	1				
2	68T–11325–00	ANODE ANODO	8	8				
3	90151–05M05	SCREW, COUNTERSUNK TORNILLO EMBUTIDO	8	8				
4	63P–41114–A2	GASKET, EXHAUST OUTER COVER EMPAQUE	1	1				
5	90119–06MA4	BOLT, WITH WASHER TORNILLO CON ARANDELA	19	19				
6	6G5–12416–00	VALVE, PRESSURE CONTROL VALVULA DE CONTROL DE PRESION	1	1				
7	90501–16M11	SPRING, COMPRESSION RESORTE DE COMPRESION	1	1				
8	90480–20M05	GROMMET TAPON	1	1				
9	67F–1246A–A0–9S	COVER 1 CUBIERTA 1	1	1				
10	67F–12435–A0	GASKET EMPAQUE	1	1				
11	90119–06MA2	BOLT, WITH WASHER TORNILLO CON ARANDELA	3	3				
12	69J–11301–00	ANODE COVER ASSY CONJUNTO CUBIERTA DE ANODO	1	1				
13	67F–11325–01	.ANODE .ANODO	1	1				
14	67F–11328–00	.GROMMET, ANODE .TAPON	1	1				
15	90105–06M07	.BOLT, FLANGE .TORNILLO	1	1				
16	90430–06M03	.GASKET .JUNTA	1	1				
17	97575–08540	BOLT, WITH WASHER PERNO CON ARANDELA	1	1				
18	67F–12411–01	THERMOSTAT TERMOSTAT	1	1				
19	67F–12412–00	.SEAL, THERMOSTAT .SELLO TERMOSTATO	1	1				
20	63P–1240H–01–9S	COVER ASSEMBLY CUBIERTA COPL.	1	1				
21	63P–12414–00	GASKET, COVER EMPAQUE	1	1				
22	90119–06MA4	BOLT, WITH WASHER TORNILLO CON ARANDELA	3	3				
23	90340–18M09	PLUG, STRAIGHT SCREW TORNILLO, DE DRENAJE	1	1				
24	90201–186F1	WASHER, PLATE ARANDELA PLANA	1	1				
25	63P–1243A–00	HOSE 1 TUBO 1	1	1				
26	90465–11M10	CLAMP BRIDA	2	2				
27	90340–14M06	PLUG, STRAIGHT SCREW TORNILLO, DE DRENAJE	1	1				

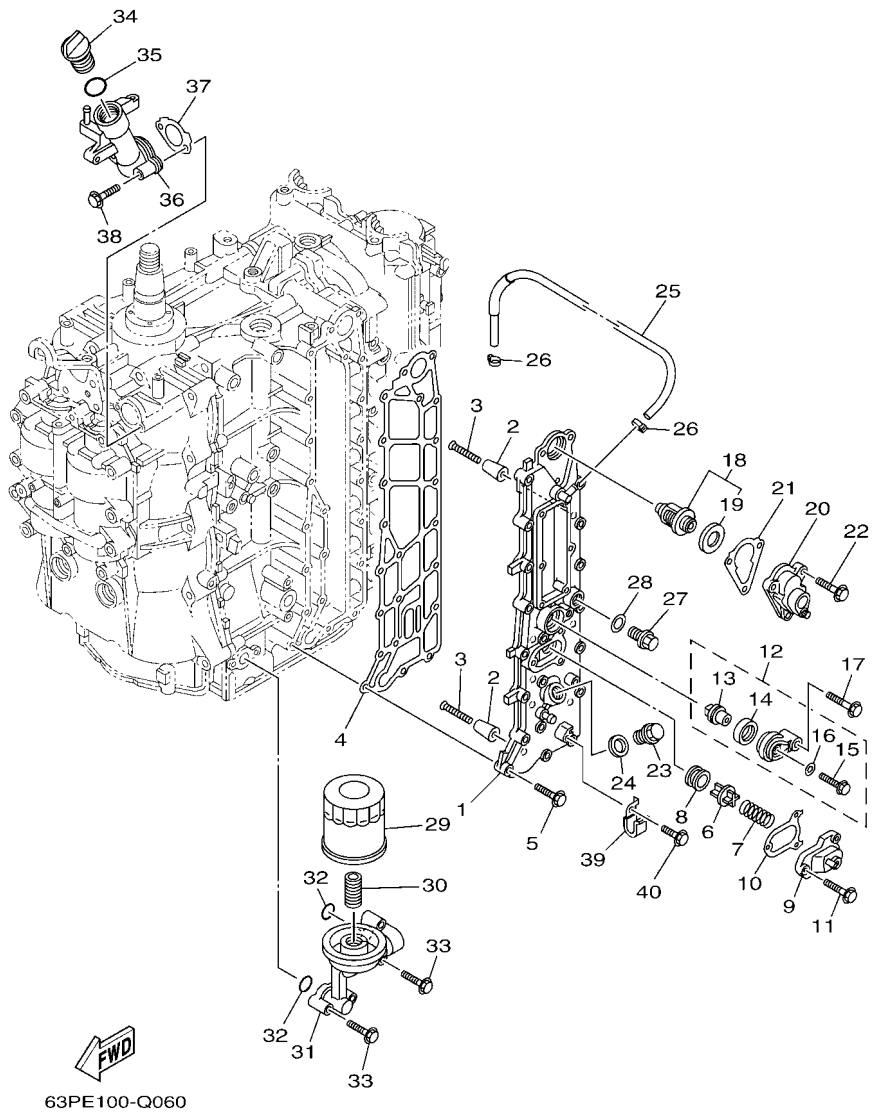

FIG. 6 CYLINDER & CRANKCASE 3 — CILINDRO & CARTER 3

REF. NO.	PART NO. CODIGO Nº	DESCRIPTION DESCRIPCION	63PE	64PE				REMARKS OBSERVACIONES
28	90430–14115	GASKET JUNTA	1	1				
29	69J–13440–03	ELEMENT ASSY, OIL CLEANER ELEMENTO FILTRO DE ACEITE	1	1				
30	6S5–12858–00	BOLT, UNION PERNO DE UNION	1	1				
31	63P–13446–00–9S	CONNECTOR CONECTOR	1	1				
32	93210–19MJ1	O-RING ANILLO O	2	2				
33	97575–06540	BOLT, WITH WASHER PERNO CON ARANDELA	4	4				
34	6G8–15363–00	PLUG, OIL TAPON DE ACEITE	1	1				
35	93210–24M79	O-RING ANILLO O	1	1				
36	63P–15319–00–9S	JOINT CONECTOR	1	1				
37	63P–15364–A0	GASKET, OIL PLUG EMPAQUE TAPON DE ACEITE	1	1				
38	97595–06545	BOLT, WITH WASHER PERNO CON ARANDELA	2	2				
39	90462–06013	CLAMP BRIDA	1	1				
40	97595–06512	BOLT, WITH WASHER PERNO CON ARANDELA	1	1				

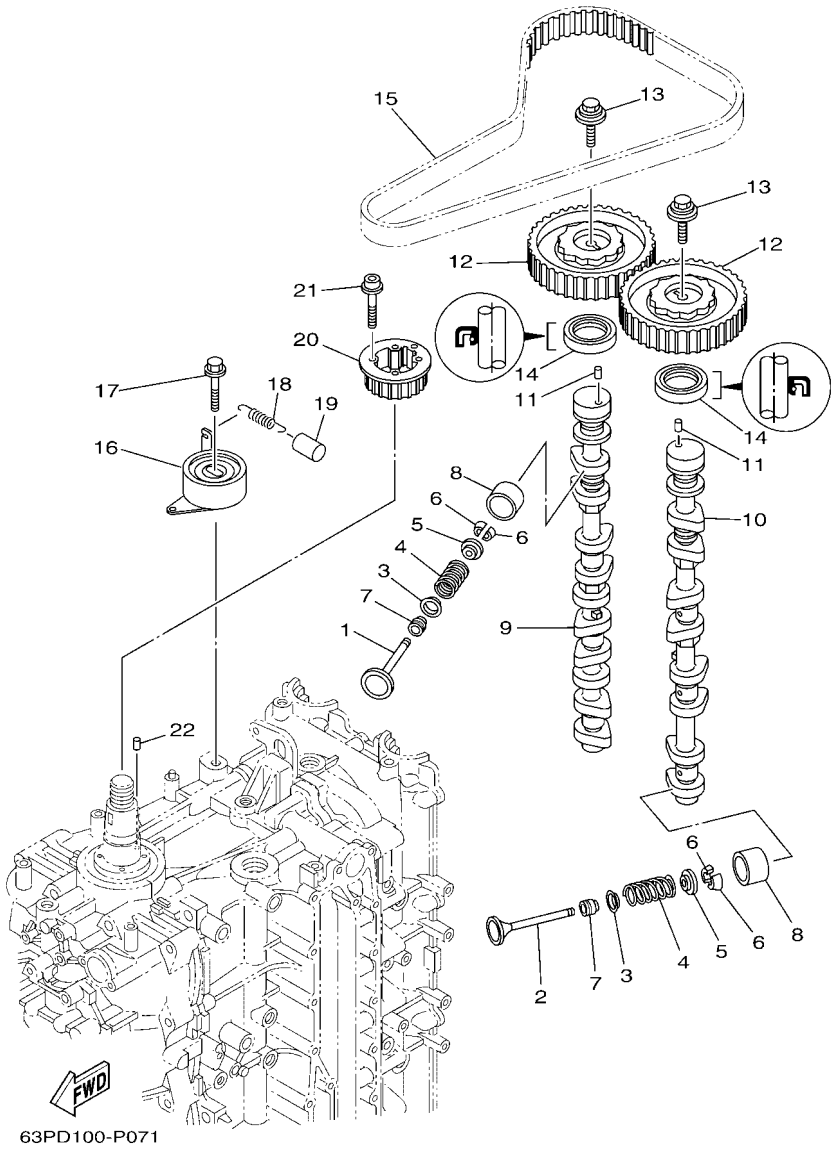

FIG. 7 VALVE — VALVULA

REF. NO.	PART NO. CODIGO Nº	DESCRIPTION DESCRIPCION	63PE	64PE				REMARKS OBSERVACIONES
1	63P–12111–00	VALVE, INTAKE VALVULA DE ADMISION	8	8				
2	63P–12121–00	VALVE, EXHAUST VALVULA DE ESCAPE	8	8				
3	K0F–A3743–00	SEAT, VALVE SPRING ASIENTO RESORTE DE VALVULA	16	16				
4	6CB–12113–00	SPRING, VALVE INNER RESORTE VALVULA INTERNA	16	16				
5	K0F–A3741–00	RETAINER, VALVE SPRING RETEN RESORTE DE VALVULA	16	16				
6	K0F–A3742–00	LOCK, VALVE SPRING RETAINER SEGURO DE VALVULA	32	32				
7	51Y–12119–00	SEAL, VALVE STEM SELLO DE ACEITE VALVULA	16	16				
8	K0F–A3751–00	LIFTER, VALVE (3.000) LEVANTADOR DE VALVULA (3.000)	16	16				UR UR
	K0F–A3751–10	LIFTER, VALVE (3.025) LEVANTADOR DE VALVULA (3.025)	16	16				UR UR
	K0F–A3751–20	LIFTER, VALVE (3.050) LEVANTADOR DE VALVULA (3.050)	16	16				UR UR
	K0F–A3751–30	LIFTER, VALVE (3.075) LEVANTADOR DE VALVULA (3.075)	16	16				UR UR
	K0F–A3751–40	LIFTER, VALVE (3.100) LEVANTADOR DE VALVULA (3.100)	16	16				UR UR
	K0F–A3751–50	LIFTER, VALVE (3.122) LEVANTADOR DE VALVULA (3.122)	16	16				UR UR
	K0F–A3751–60	LIFTER, VALVE (3.142) LEVANTADOR DE VALVULA (3.142)	16	16				UR UR
	K0F–A3751–70	LIFTER, VALVE (3.162) LEVANTADOR DE VALVULA (3.162)	16	16				UR UR
	K0F–A3751–80	LIFTER, VALVE (3.182) LEVANTADOR DE VALVULA (3.182)	16	16				UR UR
	K0F–A3751–90	LIFTER, VALVE (3.202) LEVANTADOR DE VALVULA (3.202)	16	16				UR UR
	K0F–A3751–A0	LIFTER, VALVE (3.222) LEVANTADOR DE VALVULA (3.222)	16	16				UR UR
	K0F–A3751–B0	LIFTER, VALVE (3.242) LEVANTADOR DE VALVULA (3.242)	16	16				UR UR
	K0F–A3751–C0	LIFTER, VALVE (3.262) LEVANTADOR DE VALVULA (3.262)	16	16				UR UR
	K0F–A3751–D0	LIFTER, VALVE (3.282) LEVANTADOR DE VALVULA (3.282)	16	16				UR UR
	K0F–A3751–E0	LIFTER, VALVE (3.302) LEVANTADOR DE VALVULA (3.302)	16	16				UR UR
	K0F–A3751–F0	LIFTER, VALVE (3.322) LEVANTADOR DE VALVULA (3.322)	16	16				UR UR
	K0F–A3751–G0	LIFTER, VALVE (3.342) LEVANTADOR DE VALVULA (3.342)	16	16				UR UR
	K0F–A3751–H0	LIFTER, VALVE (3.362) LEVANTADOR DE VALVULA (3.362)	16	16				UR UR
	K0F–A3751–J0	LIFTER, VALVE (3.382) LEVANTADOR DE VALVULA (3.382)	16	16				UR UR
	K0F–A3751–K0	LIFTER, VALVE (3.402) LEVANTADOR DE VALVULA (3.402)	16	16				UR UR

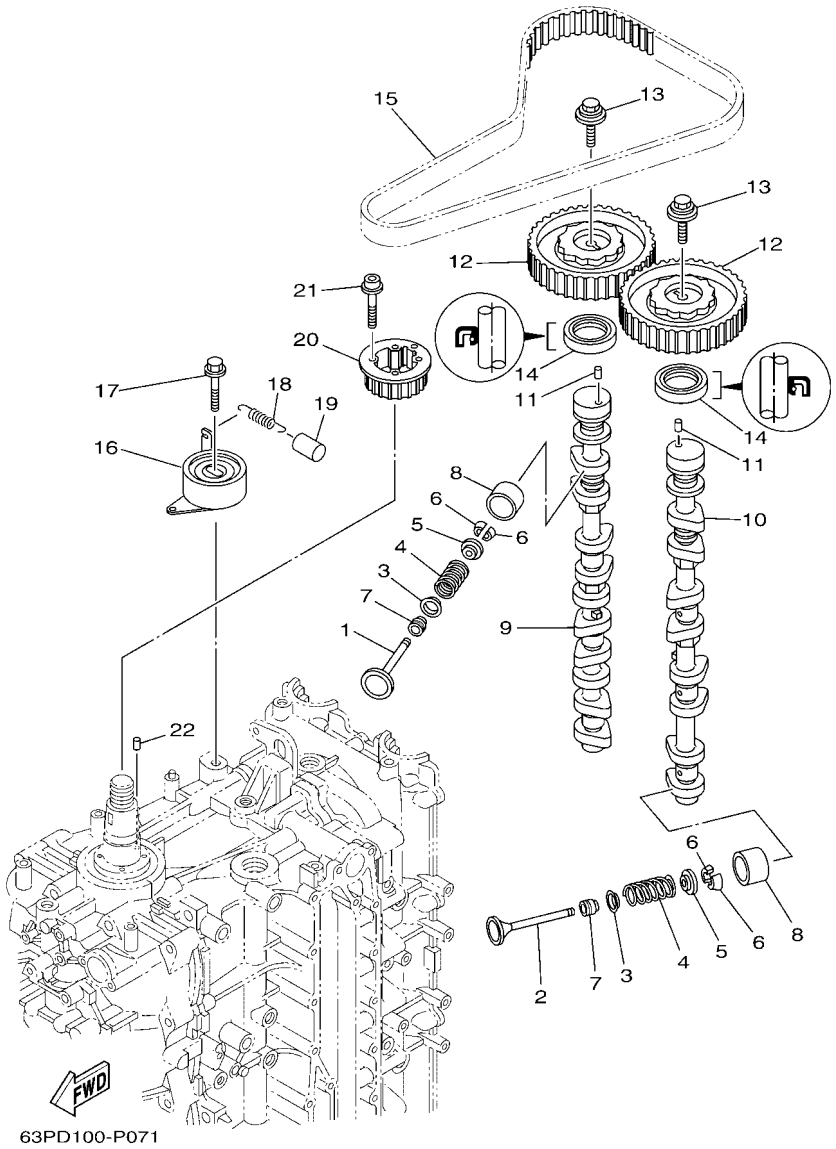

FIG. 7 VALVE — VALVULA

REF. NO.	PART NO. CODIGO Nº	DESCRIPTION DESCRIPCION	63PE	64PE				REMARKS OBSERVACIONES
8	K0F–A3751–L0	LIFTER, VALVE (3.422) LEVANTADOR DE VALVULA (3.422)	16	16				UR UR
	K0F–A3751–M0	LIFTER, VALVE (3.442) LEVANTADOR DE VALVULA (3.442)	16	16				UR UR
	K0F–A3751–N0	LIFTER, VALVE (3.462) LEVANTADOR DE VALVULA (3.462)	16	16				UR UR
	K0F–A3751–P0	LIFTER, VALVE (3.482) LEVANTADOR DE VALVULA (3.482)	16	16				UR UR
	K0F–A3751–R0	LIFTER, VALVE (3.502) LEVANTADOR DE VALVULA (3.502)	16	16				UR UR
	K0F–A3751–S0	LIFTER, VALVE (3.522) LEVANTADOR DE VALVULA (3.522)	16	16				UR UR
	K0F–A3751–T0	LIFTER, VALVE (3.542) LEVANTADOR DE VALVULA (3.542)	16	16				UR UR
	K0F–A3753–00	LIFTER, VALVE (3.562) LEVANTADOR DE VALVULA (3.562)	16	16				UR UR
	K0F–A3753–10	LIFTER, VALVE (3.582) LEVANTADOR DE VALVULA (3.582)	16	16				UR UR
	K0F–A3753–20	LIFTER, VALVE (3.602) LEVANTADOR DE VALVULA (3.602)	16	16				UR UR
	K0F–A3753–30	LIFTER, VALVE (3.625) LEVANTADOR DE VALVULA (3.625)	16	16				UR UR
	K0F–A3753–40	LIFTER, VALVE (3.650) LEVANTADOR DE VALVULA (3.650)	16	16				UR UR
	K0F–A3753–50	LIFTER, VALVE (3.675) LEVANTADOR DE VALVULA (3.675)	16	16				UR UR
	K0F–A3753–60	LIFTER, VALVE (3.700) LEVANTADOR DE VALVULA (3.700)	16	16				UR UR
	K0F–A3753–70	LIFTER, VALVE (3.725) LEVANTADOR DE VALVULA (3.725)	16	16				UR UR
9	63P–12171–10	CAMSHAFT 1 ARBOL DE LEVAS 1	1	1				
10	63P–12181–10	CAMSHAFT 2 ARBOL DE LEVAS 2	1	1				
11	93605–10108	PIN, DOWEL PASADOR DE CLAVIJA	2	2				
12	63P–11537–00	GEAR, DRIVEN ENGRANAJE TRACCION	2	2				
13	90119–10050	BOLT, WITH WASHER TORNILLO CON ARANDELA	2	2				
14	93102–38008	OIL SEAL SELLO ACEITE	2	2				
15	63P–46241–00	BELT CORREA	1	1				
16	63P–11590–10	TENSIONER ASSY TENSOR COMPLET	1	1				
17	90119–10M07	BOLT, WITH WASHER TORNILLO CON ARANDELA	1	1				
18	90506–16M39	SPRING, TENSION RESORTE DE TENSION	1	1				
19	90445–15M03	HOSE (L23) TUBO (L23)	1	1				
20	63P–11536–01	GEAR, DRIVE ENGRANAJE TRACCION	1	1				

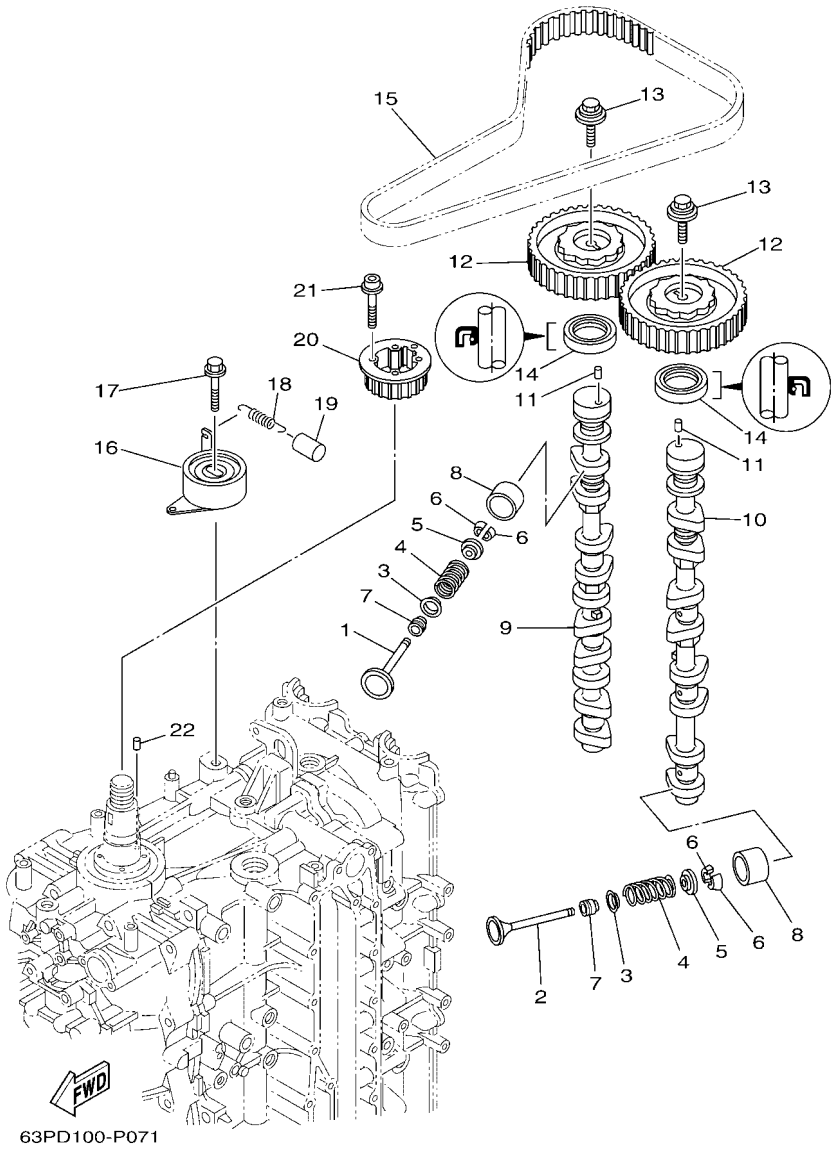

FIG. 7 VALVE — VALVULA

REF. NO.	PART NO. CODIGO Nº	DESCRIPTION DESCRIPCION	63PE	64PE				REMARKS OBSERVACIONES
21	90110–05020	BOLT, HEXAGON SOCKET HEAD TORNILLO ALLEN	4	4				
22	93605–17002	PIN, DOWEL PASADOR DE CLAVIJA	1	1				

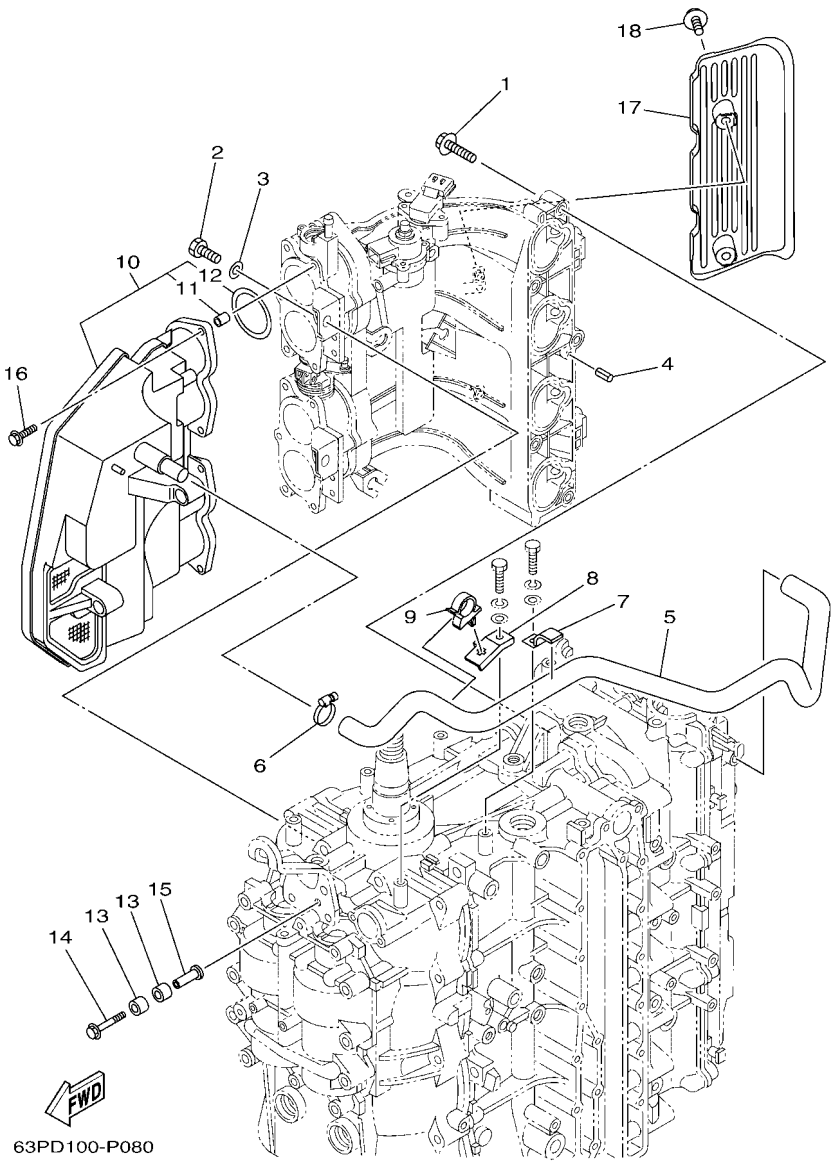

FIG. 8 INTAKE 1 — ADMISION 1

REF. NO.	PART NO. CODIGO Nº	DESCRIPTION DESCRIPCION	63PE	64PE				REMARKS OBSERVACIONES
1	97575–08540	BOLT, WITH WASHER PERNO CON ARANDELA	5	5				
2	97013–08020	BOLT PERNO	2	2				
3	92903–08600	WASHER, PLATE RONDANA SENCILLA	2	2				
4	91690–50014	PIN, SPRING PASADOR DE RESORTE	2	2				
5	63P–15373–00	PIPE, BREATHER MANGUELA DE RESPIRADERO	1	1				
6	90450–22M14	HOSE CLAMP ASSY BRIDA, MANGUERA	1	1				
7	90462–10023	CLAMP BRIDA	1	1				
8	63P–15378–00	HOLDER SOPORTE	1	1				
9	90464–20006	CLAMP BRIDA	1	1				
10	63P–14440–00	SILENCER ASSY, INTAKE SILENCIADOR COMPL DE ADMISION	1	1				
11	63P–14449–00	.COLLAR .COLLAR	6	6				
12	63P–14457–00	.SEAL .SELLO	4	4				
13	90386–08001	BUSH BUJE	4	4				
14	90119–06076	BOLT, WITH WASHER TORNILLO CON ARANDELA	2	2				
15	90387–06280	COLLAR ESPACIADOR	2	2				
16	90119–06M82	BOLT, WITH WASHER TORNILLO CON ARANDELA	6	6				
17	63P–13564–00	COVER, MANIFOLD CUBIERTA DE MULTIPLE	1	1				
18	95895–06016	BOLT, FLANGE TORNILLO DE REBORDE	2	2				

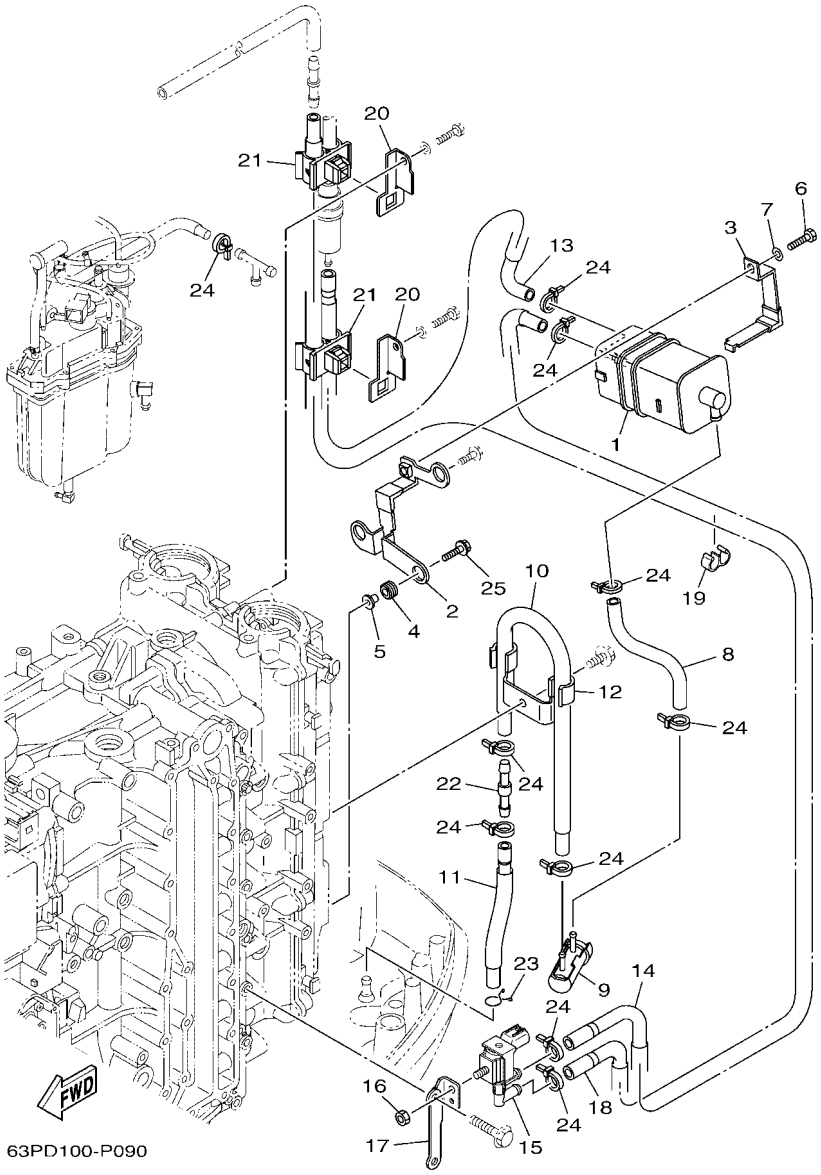

FIG. 9 INTAKE 2 — ADMISION 2

REF. NO.	PART NO. CODIGO Nº	DESCRIPTION DESCRIPCION	63PE	64PE				REMARKS OBSERVACIONES
1	6P2–24170–00	CANISTER ASSY FRANJA DE DEPOSITO DE COMBUST.	1	1				
2	63P–2134X–00	BRACKET, CANISTER SOPORTE	1	1				
3	63P–2419A–01	HOLDER SOSTEN	1	1				
4	90480–10M23	GROMMET TAPON	3	3				
5	90387–06289	COLLAR ESPACIADOR	3	3				
6	97095–06016	BOLT PERNO	1	1				
7	92995–06600	WASHER ARANDELA	1	1				
8	64P–24313–00	PIPE 3 TUBO 3	1	1				
9	69J–24502–00	FILTER, FUEL FIELTRO	1	1				
10	64P–24312–00	PIPE 2 TUBO 2	1	1				
11	64P–24311–10	PIPE, FUEL 1 TUBO DE COMBUSTIBLE 1	1	1				
12	63P–24367–01	CLAMP, FUEL PIPE 2 GRAMPA DE TUBO DE COMBUST.2	1	1				
13	64P–24315–00	PIPE 5 TUBO DE DESAGUE	1	1				
14	64P–24316–10	PIPE 6 TUBO 6	1	1				
15	6C5–86120–00	SOLENOID VALVE ASSY VALVULA SOLENOIDE CONJ.	1	1				
16	95380–06600	NUT, HEXAGON TUERCA	1	1				
17	63P–81845–20	PLATE PLACA	1	1				
18	64P–24314–10	PIPE 4 TUBO 4	1	1				
19	90464–09M31	CLAMP BRIDA	1	1				
20	63P–24364–01	STAY SOPORTE	2	2				
21	90464–11012	CLAMP BRIDA	2	2				
22	6E5–24379–00	PIPE, JOINT 4 TUBO DE UNION 4	1	1				
23	90467–09M09	CLIP PRESILLA	1	1				
24	90465–11M10	CLAMP BRIDA	10	10				
25	90119–06135	BOLT, WITH WASHER TORNILLO CON ARANDELA	2	2				

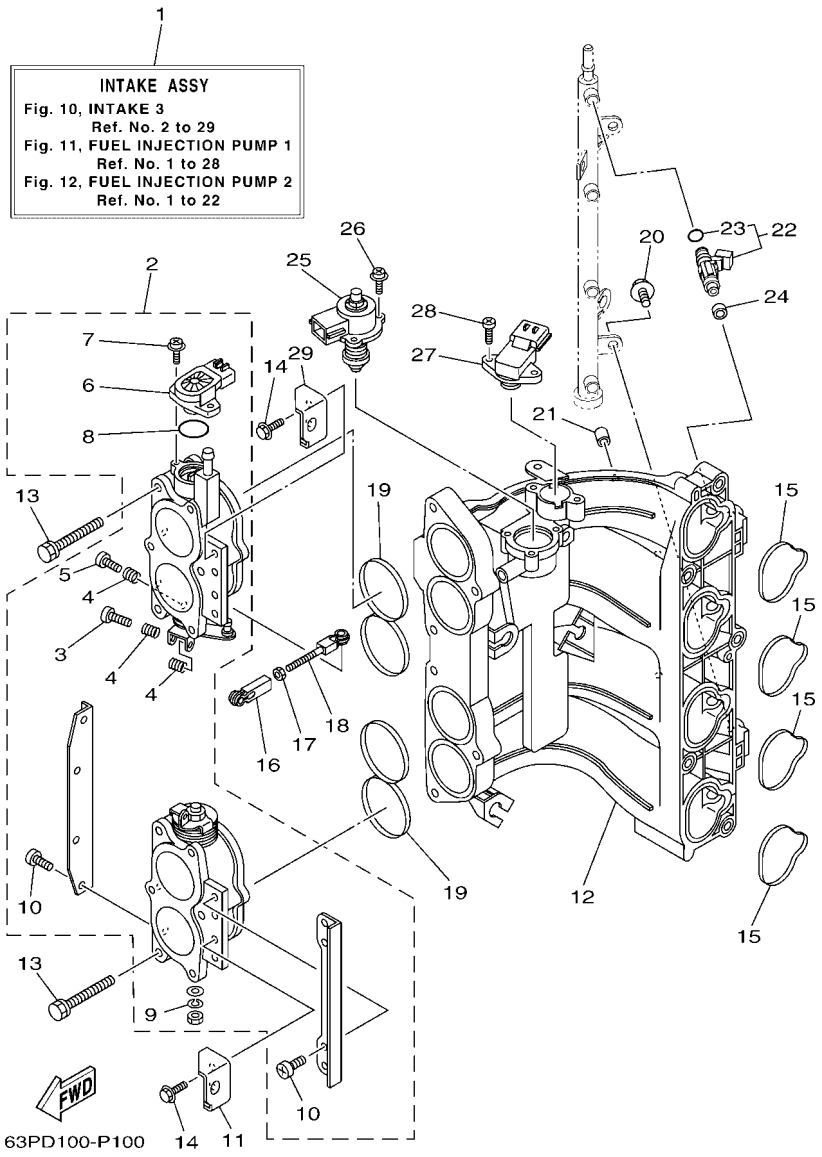

FIG. 10 INTAKE 3 — ADMISION 3

REF. NO.	PART NO. CODIGO Nº	DESCRIPTION DESCRIPCION	63PE	64PE				REMARKS OBSERVACIONES
1	63P–14200–60	INTAKE ASSY ADMISION COMPL.	1					FOR CSA FOR CSA
	63P–14200–90	INTAKE ASSY ADMISION COMPL.	1	1				FOR CAR FOR CAR
	63P–14200–70	INTAKE ASSY ADMISION COMPL.	1	1				FOR BRA FOR BRA
2	63P–13751–20	BODY, THROTTLE 1 CAJA 1	1	1				FOR CAR,CSA FOR CAR,CSA
	63P–13751–30	BODY, THROTTLE 1 CAJA 1	1	1				FOR BRA FOR BRA
3	69J–14321–00	.SCREW, THROTTLE .TORNILLO DE OBTURADOR	1	1				
4	68V–14331–00	.SPRING, THROTTLE VALVE .RESORTE VALVULA ACELERADOR	3	3				
5	68V–14323–00	.SCREW, AIR ADJUSTING .TORNILLO DE AJUSTE DE AIRE	1	1				
6	6S1–85885–00	.THROTTLE SENSOR ASSY .TERMICA SENSORIO	1	1				
7	68V–81145–01	.SCREW 1 .TORNILLO 1	2	2				
8	68V–8182L–00	.O-RING 1 .ANILLO EN O	1	1				
9	68V–14356–00	.WASHER, SPRING .ARANDELA DE RESORTE	1	1				
10	68V–14565–00	.SCREW .TORNILLO	8	8				
11	63P–14291–00	BRACKET 1 SOPORTE 1	1	1				
12	63P–13641–10	MANIFOLD, INTAKE 1 CONECTOR DE ADMISSION 1	1	1				
13	63P–14496–00	BOLT PERNO	6	6				
14	97595–06516	BOLT, WITH WASHER PERNO CON ARANDELA	4	4				
15	63P–13645–00	GASKET, MANIFOLD 1 EMPAQUE	4	4				
16	6H4–41237–00	JOINT, LINK CONECTOR	1	1				
17	95380–05700	NUT TUERCA	1	1				
18	682–41238–01	JOINT, LINK CONECTOR	1	1				
19	63P–13557–00	GASKET EMPAQUE	2	2				
20	6P2–14446–00	BOLT PERNO	2	2				
21	63P–13643–00	COVER, MANIFOLD CUBIERTA DE COLECTOR	4	4				
22	63P–13761–01	INJECTOR INYECTOR	4	4				
23	68V–1416A–00	.O-RING .ANILLO O	1	1				
24	68V–13766–00	RUBBER, INJECTOR ANILLO PROTECTOR	4	4				FOR CAR,CSA FOR CAR,CSA

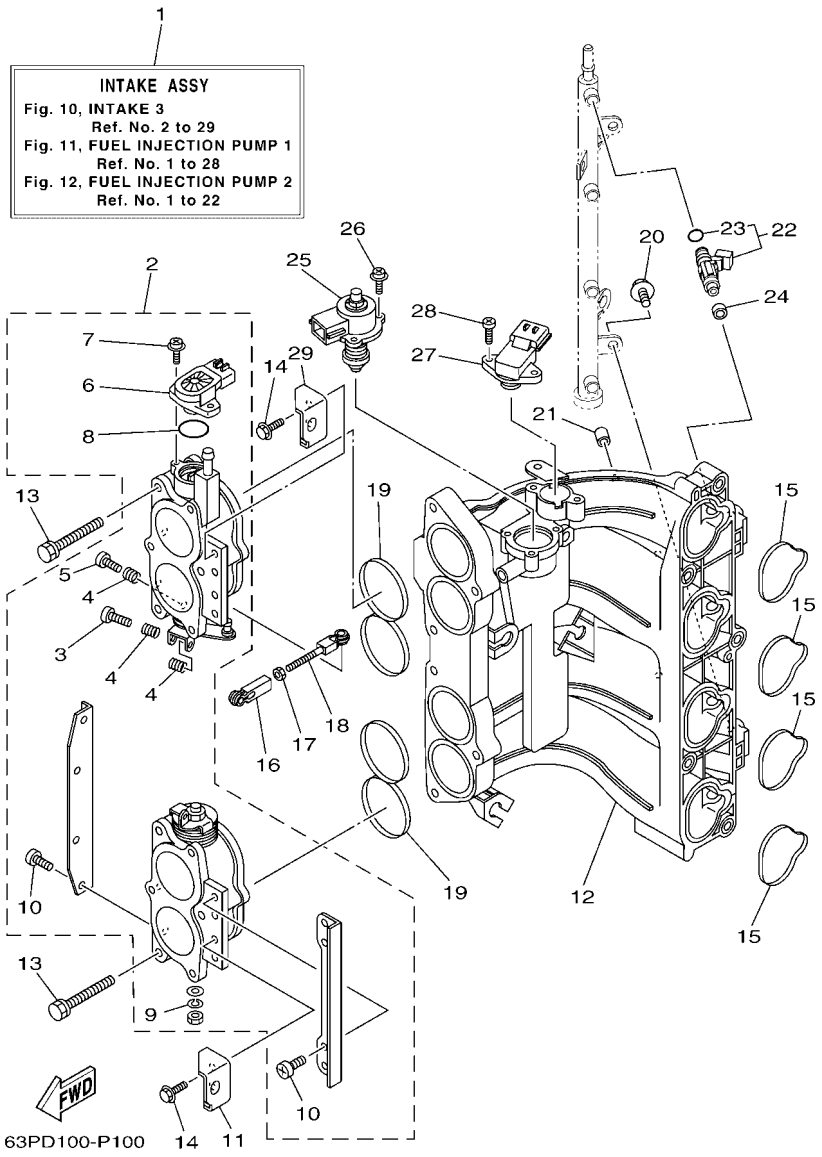

FIG. 10 INTAKE 3 — ADMISION 3

REF. NO.	PART NO. CODIGO Nº	DESCRIPTION DESCRIPCION	63PE	64PE				REMARKS OBSERVACIONES
24	8FP–13556–00	RUBBER, INJECTOR ANILLO PROTECTOR	4	4				FOR BRA FOR BRA
25	63P–1312A–01	VALVE, CONTROL EMBLEMA, YAMAHA	1	1				
26	68V–81146–01	SCREW 2 TORNILLO 2	3	3				
27	63P–82380–00	SENSOR, PRESSURE SENSOR DE PRESION	1	1				
28	68V–81147–00	SCREW 3 TORNILLO 3	2	2				
29	63P–14292–00	BRACKET 2 SOPORTE 2	1	1				

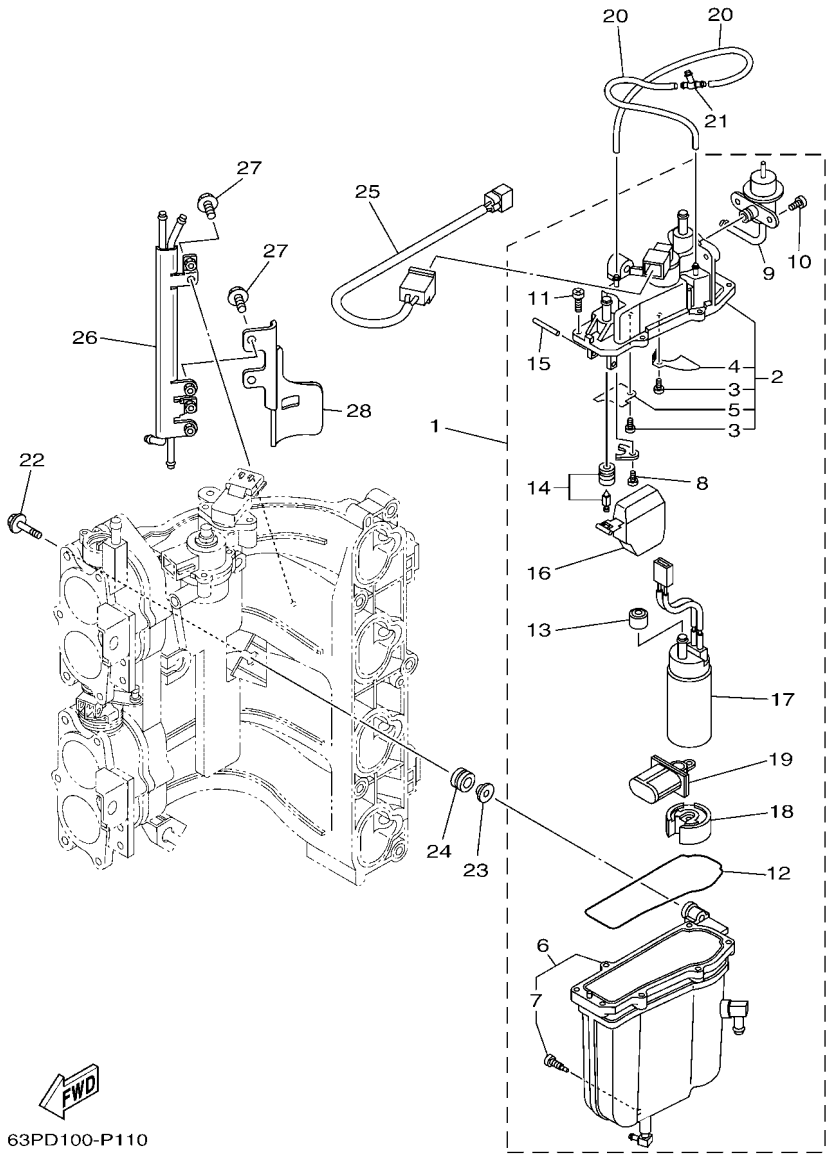

FIG. 11 FUEL INJECTION PUMP 1 — BOMBA DE INYECTOR 1

REF. NO.	PART NO. CODIGO Nº	DESCRIPTION DESCRIPCION	63PE	64PE				REMARKS OBSERVACIONES
1	63P–14180–20	FLOAT CHAMBER ASSY CAMARA DE BOIA COMPLETE	1	1				FOR CAR,CSA FOR CAR,CSA
	63P–14180–30	FLOAT CHAMBER ASSY CAMARA DE BOIA COMPLETE	1	1				FOR BRA FOR BRA
2	63P–14182–20	.COVER, FLOAT CHAMBER .TAPA DE CAMARA DE BOIA	1	1				FOR CAR,CSA FOR CAR,CSA
	63P–14182–30	.COVER, FLOAT CHAMBER .TAPA DE CAMARA DE BOIA	1	1				FOR BRA FOR BRA
3	4SV–24453–00	..SCREW ..TORNILLO	2	2				FOR CAR,CSA FOR CAR,CSA
	69J–24453–00	..SCREW ..TORNILLO	2	2				FOR BRA FOR BRA
4	63P–2411R–00	..PLATE 1 ..PLACA 1	1	1				
5	63P–2411T–00	..PLATE 2 ..PLACA 2	1	1				
6	63P–14181–20	.BODY, FLOAT CHAMBER 1 .CUERPO DE CAMARA DE BOIA	1	1				FOR CAR,CSA FOR CAR,CSA
	63P–14181–30	.BODY, FLOAT CHAMBER 1 .CUERPO DE CAMARA DE BOIA	1	1				FOR BRA FOR BRA
7	63P–14191–00	..PLUG, DRAIN ..TORNILLO, DE DRENAJE	1	1				
8	4SV–24453–00	.SCREW .TORNILLO	1	1				FOR CAR,CSA FOR CAR,CSA
	69J–24453–00	.SCREW .TORNILLO	1	1				FOR BRA FOR BRA
9	63P–13906–00	.REGULATOR, PRESSURE .REGULADOR	1	1				
10	63P–14565–00	.SCREW .TORNILLO	1	1				
11	63P–14567–00	.SCREW .TORNILLO	7	7				
12	63P–14984–00	.GASKET, FLOAT CHAMBER .EMPAQUE CAMARA DE BOIA	1	1				FOR CAR,CSA FOR CAR,CSA
	63P–14984–10	.GASKET, FLOAT CHAMBER .EMPAQUE CAMARA DE BOIA	1	1				FOR BRA FOR BRA
13	68V–13781–20	.GROMMET & COLLAR SET .TOPON Y COLLAR	1	1				
14	63P–14546–00	.VALVE, NEEDLE .VALVULA DE AGUJA	1	1				FOR CAR,CSA FOR CAR,CSA
	63P–14546–10	.VALVE, NEEDLE .VALVULA DE AGUJA	1	1				FOR BRA FOR BRA
15	68V–14386–00	.PIN, FLOAT .PASADOR DE BOIA	1	1				
16	63P–14985–00	.FLOAT .BOIA	1	1				
17	63P–13907–03	.FUEL PUMP COMP. .BOMBA DE COMBUSTIBLE COMPLETA	1	1				FOR CAR,CSA FOR CAR,CSA
	63P–13907–12	.FUEL PUMP COMP. .BOMBA DE COMBUSTIBLE COMPLETA	1	1				FOR BRA FOR BRA
18	63P–13784–00	.COVER, PUMP .CUBIERTA DE BOMBA	1	1				FOR CAR,CSA FOR CAR,CSA
	63P–13784–10	.COVER, PUMP .CUBIERTA DE BOMBA	1	1				FOR BRA FOR BRA

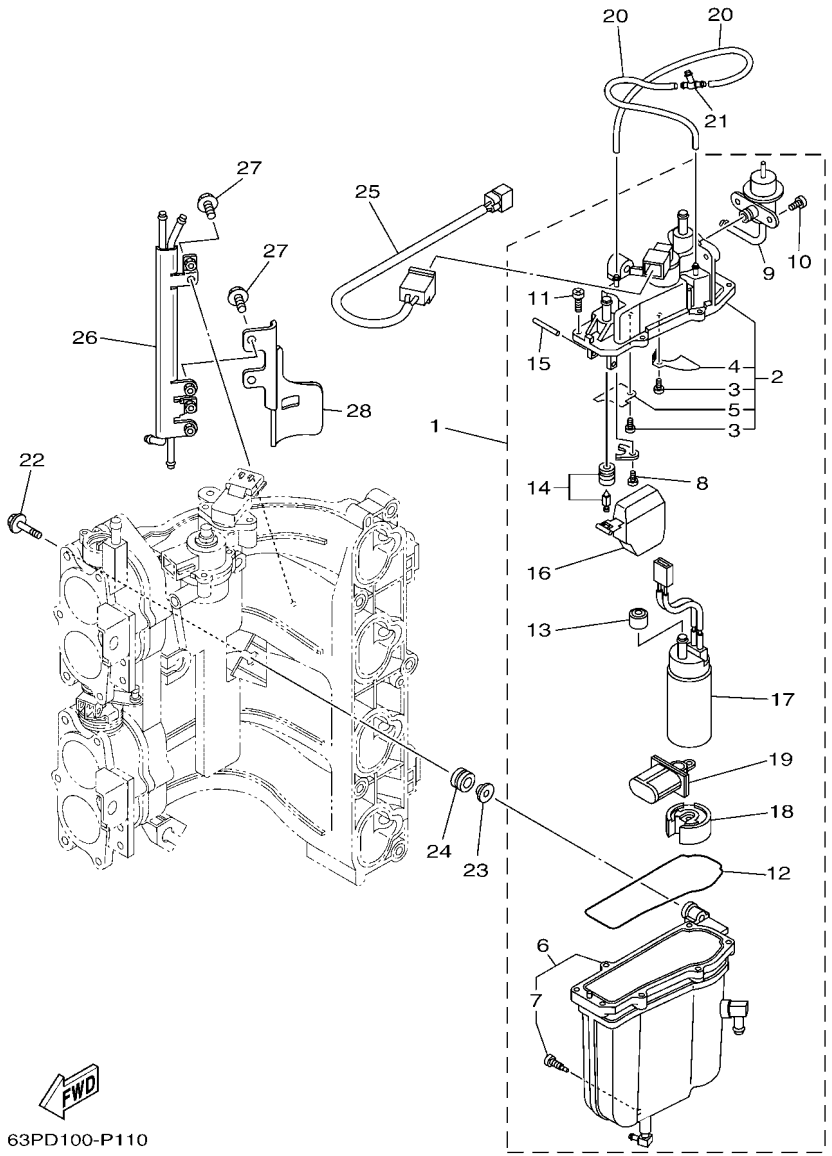

FIG. 11 FUEL INJECTION PUMP 1 — BOMBA DE INYECTOR 1

REF. NO.	PART NO. CODIGO Nº	DESCRIPTION DESCRIPCION	63PE	64PE				REMARKS OBSERVACIONES
19	63P–13915–00	.FILTER .FILTRO	1	1				
20	63P–14148–00	PIPE TUBO	2	2				
21	69J–24379–00	PIPE, JOINT 4 TUBO DE UNION 4	1	1				
22	90119–06269	BOLT, WITH WASHER TORNILLO CON ARANDELA	3	3				
23	63P–13716–00	COLLAR COLLAR	3	3				
24	6BM–13593–00	DAMPER COJINETE DE RODILLOS	3	3				
25	63P–8259L–00	WIRE HARNESS ASSY 1 CONJUNTO DE CABLES 1	1	1				
26	63P–21841–00	COOLER ENFRIADOR	1	1				
27	63P–13573–00	BOLT 1 PERNO 1	3	3				
28	63P–13882–00	COVER 2 CUBIERTA 2	1	1				

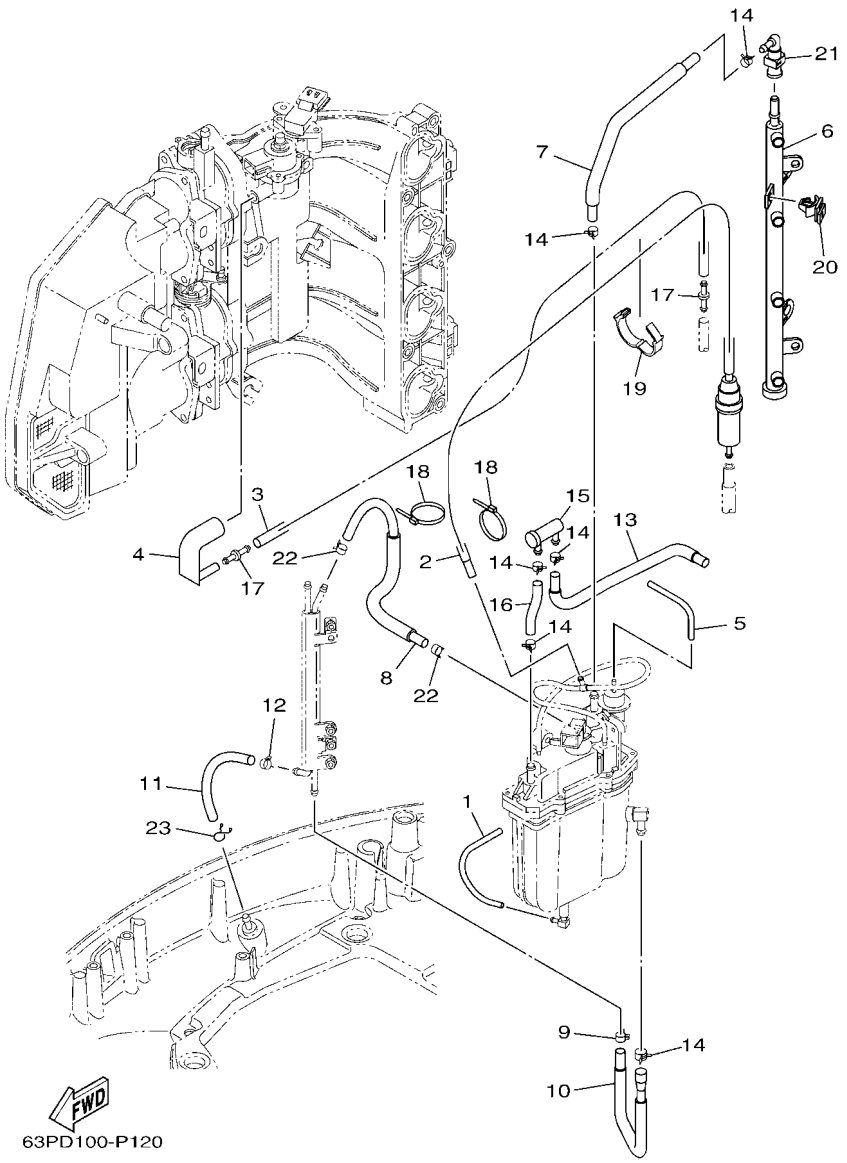

FIG. 12 FUEL INJECTION PUMP 2 — BOMBA DE INYECTOR 2

REF. NO.	PART NO. CODIGO Nº	DESCRIPTION DESCRIPCION	63PE	64PE				REMARKS OBSERVACIONES
1	63P–14149–00	PIPE TUBO	1	1				
2	63P–13971–10	PIPE, FUEL 1 ANILLO DE ESPACIADOR	1	1				WITH FILTER WITH FILTER
3	63P–13546–00	HOSE 2 SELLO	1	1				
4	63P–13545–00	HOSE 1 SELLO	1	1				
5	63P–13532–10	HOSE, VACUUM SENSING 3 MANGUERA, DE VACIO 3	1	1				
6	63P–13160–10	DELIVERY PIPE ASSY 1 TUBO DE LLEGADA CONJUNTO 1	1	1				
7	63P–13974–40	PIPE, FUEL 4 TUBO, COMBUSTIBLE 4	1	1				
8	63P–13976–40	PIPE, FUEL 6 TUBO, COMBUSTIBLE 6	1					FOR CSA FOR CSA
	63P–13976–50	PIPE, FUEL 6 TUBO, COMBUSTIBLE 6	1	1				FOR CAR,BRA FOR CAR,BRA
9	68V–2411M–00	CLIP PRESILLA	1	1				
10	63P–24317–30	PIPE 7 TUBO 7	1					FOR CSA FOR CSA
	63P–24317–40	PIPE 7 TUBO 7	1	1				FOR CAR,BRA FOR CAR,BRA
11	63P–2247B–10	HOSE 2 TUBO 2	1	1				
12	68V–24519–00	CLIP PRESILLA	1	1				
13	63P–24325–40	PIPE 14 TUBO 14	1					FOR CSA FOR CSA
	63P–24325–50	PIPE 14 TUBO 14	1	1				FOR CAR,BRA FOR CAR,BRA
14	68V–13577–00	CLIP PRESILLA	6	6				
15	69J–24501–10	FILTER, FUEL FIELTRO	1	1				
16	63P–13975–40	PIPE, FUEL 5 TUBO, COMBUSTIBLE 5	1					FOR CSA FOR CSA
	63P–13975–50	PIPE, FUEL 5 TUBO, COMBUSTIBLE 5	1	1				FOR CAR,BRA FOR CAR,BRA
17	6P2–13758–00	PIPE, JOINT TUBO DE JUNTA	2	2				
18	68V–2481H–00	CLAMP GRAMPA	2	2				
19	90464–26001	CLAMP BRIDA	1	1				
20	90464–12002	CLAMP BRIDA	1	1				
21	6AW–24300–00	FUEL PIPE JOINT CONECTOR MANGUERA COMBUSTIBLE	1	1				
22	63P–24519–00	CLIP PRESILLA	2	2				
23	90467–09M09	CLIP PRESILLA	1	1				

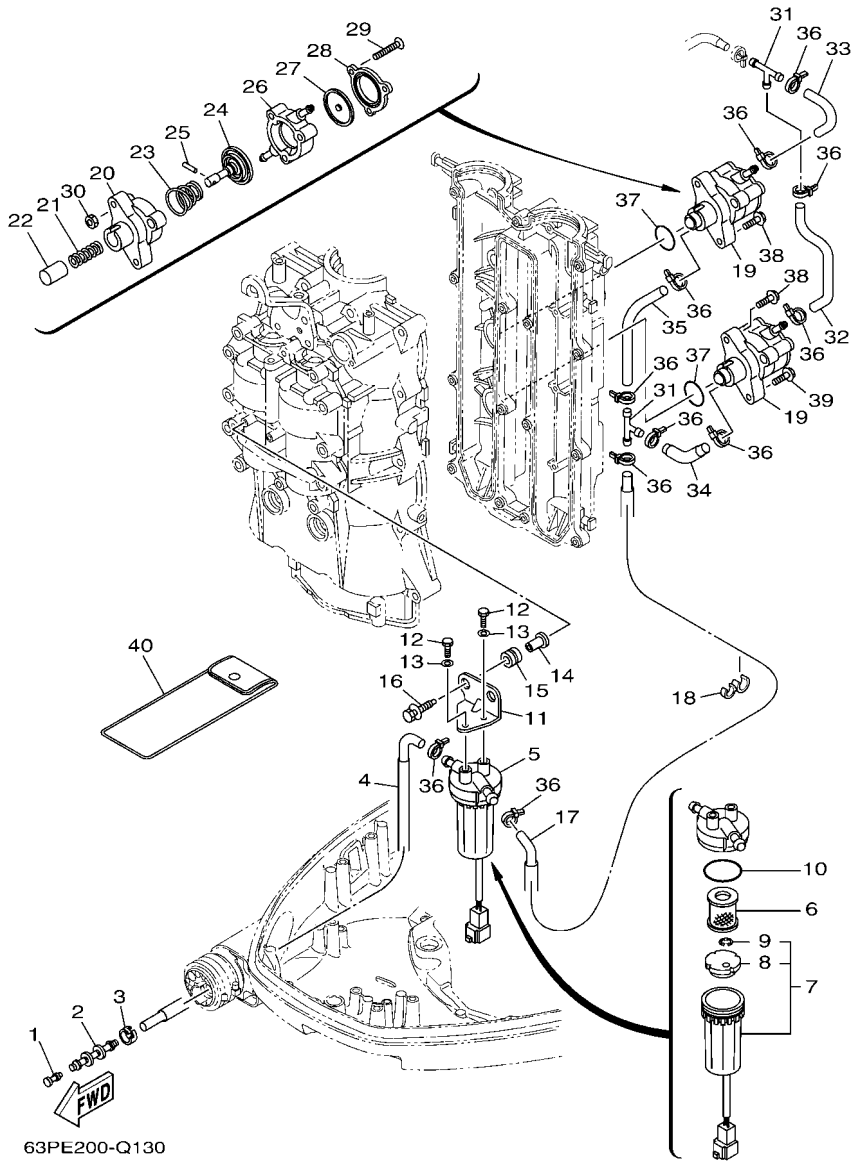

FIG. 13 FUEL 1 — COMBUSTIBLE 1

REF. NO.	PART NO. CODIGO Nº	DESCRIPTION DESCRIPCION	63PE	64PE				REMARKS OBSERVACIONES
1	689–85547–00	DAMPER AMORTIGUADOR	1	1				
2	6AW–24377–01	PIPE, JOINT 2 TUBO DE UNION 2	1	1				
3	6E5–24351–51	BAND 1 ABRAZADERA 1	1	1				
4	63P–24316–30	PIPE 6 TUBO 6	1	1				FOR BRA,CSA FOR BRA,CSA
	63P–24316–40	PIPE 6 TUBO 6	1	1				FOR CAR FOR CAR
5	6P3–24560–03	FILTER ASSY FILTRO COMPLETO	1	1				
6	6P3–24563–01	.ELEMENT, FILTER .ELEMENTO DEL FILTRO	1	1				
7	6P3–24562–03	.CUP, FILTER .COPA DE FILTRO	1	1				
8	6P3–24469–00	..FLOAT, WATER LEVEL ..BOIA	1	1				
9	6P3–24519–00	..CLIP ..PRESILLA	1	1				
10	6P3–24564–00	.GASKET .EMPAQUE	1	1				
11	63P–24566–00	BRACKET, FILTER SOPORTE DEL FILTRO	1	1				
12	97095–06014	BOLT PERNO	2	2				
13	92995–06600	WASHER ARANDELA	2	2				
14	90387–06289	COLLAR ESPACIADOR	2	2				
15	90480–10M23	GROMMET TAPON	2	2				
16	90119–06071	BOLT, WITH WASHER TORNILLO CON ARANDELA	2	2				
17	63P–24311–30	PIPE, FUEL 1 TUBO DE COMBUSTIBLE 1	1	1				FOR BRA,CSA FOR BRA,CSA
	63P–24311–20	PIPE, FUEL 1 TUBO DE COMBUSTIBLE 1	1	1				FOR CAR FOR CAR
18	90464–13M34	CLAMP BRIDA	1	1				
19	63P–24410–20	FUEL PUMP ASSY BOMBA DE COMBUSTIBLE COMPLETA	2	2				
20	68V–24412–00	.BODY 1 .CUERPO 1	1	1				
21	68V–24454–00	.SPRING .RESORTE	1	1				
22	63P–13131–00	.PLUNGER .ESPACIADOR	1	1				
23	63P–24423–00	.SPRING, DIAPHRAGM .RESORTE DE DIAFRAGMA	1	1				
24	68V–24411–00	.DIAPHRAGM .DIAFRAGMA	1	1				
25	68V–24374–00	.PIN .PASADOR	1	1				

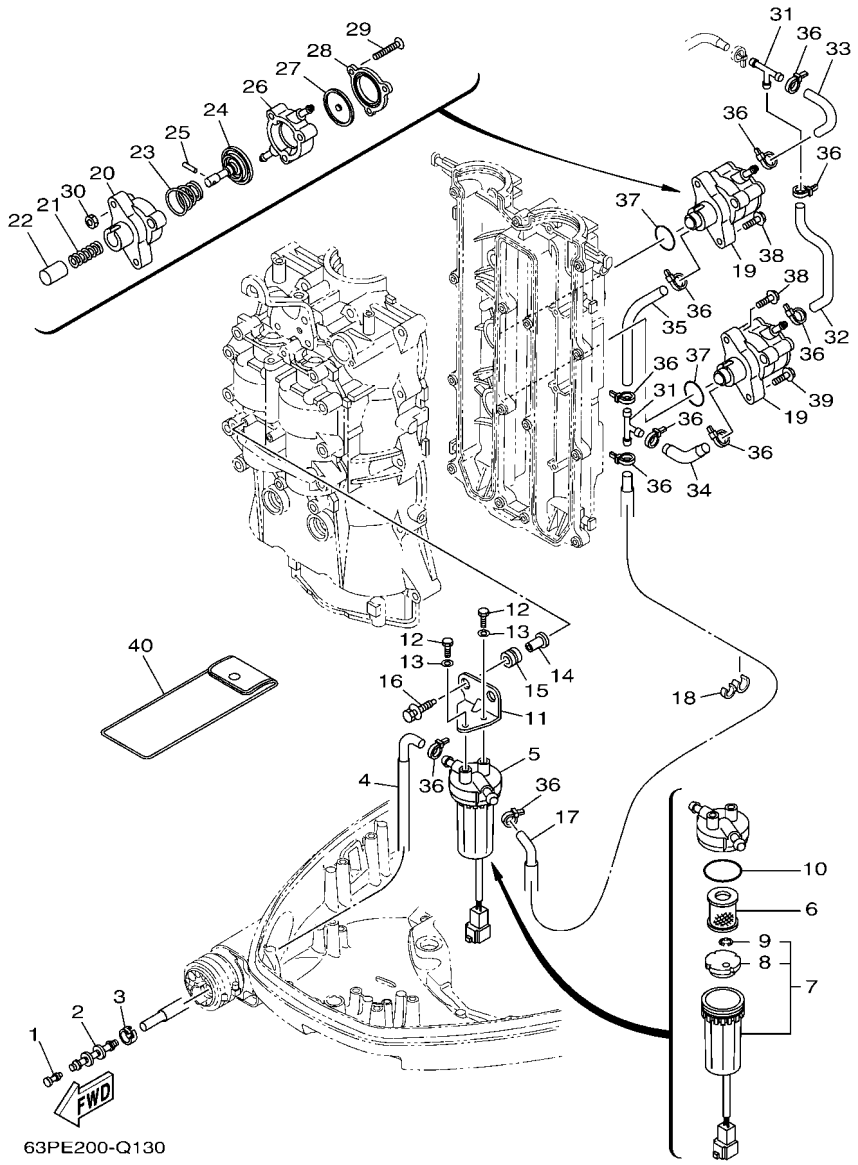

FIG. 13 FUEL 1 — COMBUSTIBLE 1

REF. NO.	PART NO. CODIGO Nº	DESCRIPTION DESCRIPCION	63PE	64PE				REMARKS OBSERVACIONES
26	63P–24413–00	.BODY 2 .CUERPO 2	1	1				
27	68V–24471–10	.DIAPHRAGM .DIAFRAGMA	1	1				
28	63P–24414–00	.BODY 3 .CUERPO 3	1	1				
29	68V–24444–00	.SCREW .TORNILLO	3	3				
30	68V–24149–00	.NUT .TUERCA	3	3				
31	6E5–24378–00	PIPE, JOINT 3 TUBO DE UNION 3	2	2				
32	63P–24314–00	PIPE 4 TUBO 4	1	1				FOR BRA,CSA FOR BRA,CSA
	63P–24314–10	PIPE 4 TUBO 4	1	1				FOR CAR FOR CAR
33	63P–24315–00	PIPE 5 TUBO DE DESAGUE	1	1				FOR BRA,CSA FOR BRA,CSA
	63P–24315–10	PIPE 5 TUBO DE DESAGUE	1	1				FOR CAR FOR CAR
34	63P–24312–10	PIPE 2 TUBO 2	1	1				FOR BRA,CSA FOR BRA,CSA
	63P–24312–20	PIPE 2 TUBO 2	1	1				FOR CAR FOR CAR
35	63P–24313–10	PIPE 3 TUBO 3	1	1				FOR BRA,CSA FOR BRA,CSA
	63P–24313–20	PIPE 3 TUBO 3	1	1				FOR CAR FOR CAR
36	90465–11M10	CLAMP BRIDA	11	11				
37	93210–30682	O-RING ANILLO O	2	2				
38	90119–06M83	BOLT, WITH WASHER TORNILLO CON ARANDELA	3	3				
39	90119–06135	BOLT, WITH WASHER TORNILLO CON ARANDELA	1	1				
40	67F–28100–01	TOOL KIT JUEGO DE HERRAMIENTAS	1	1				AP AP

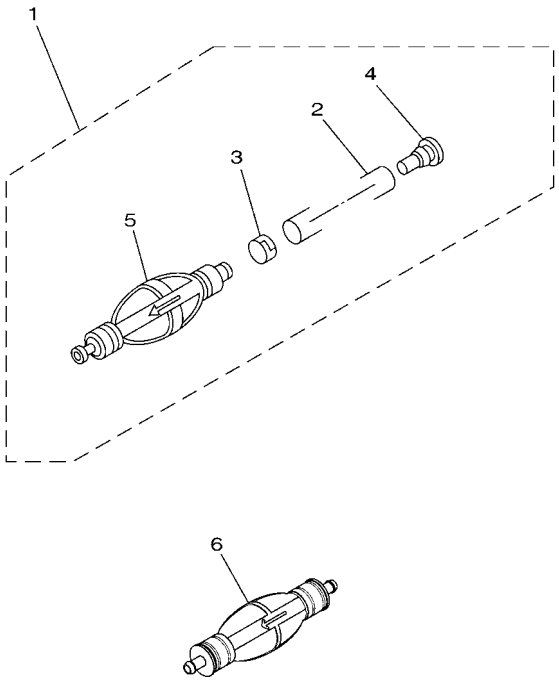

FIG. 14 FUEL 2 — COMBUSTIBLE 2

REF. NO.	PART NO. CODIGO Nº	DESCRIPTION DESCRIPCION	63PE	64PE				REMARKS OBSERVACIONES
1	6Y2–24307–50	FUEL PIPE COMP. 2 MANGUERA COMPL,COMBUSTIBLE 2	1	1				AP FOR BRA,CSA AP FOR BRA,CSA
2	90445–13M01	.HOSE (L2050) .MANGUERA (L2050)	1	1				
3	6E5–24351–51	.BAND 1 .ABRAZADERA 1	1	1				
4	90480–06M19	.GROMMET .TAPON	1	1				
5	6Y2–24360–60	.PRIMER PUMP ASSY .SOPORTE BOMBA	1	1				
6	6YK–24360–73	PRIMER PUMP ASSY SOPORTE BOMBA	1	1				AP FOR CAR AP FOR CAR

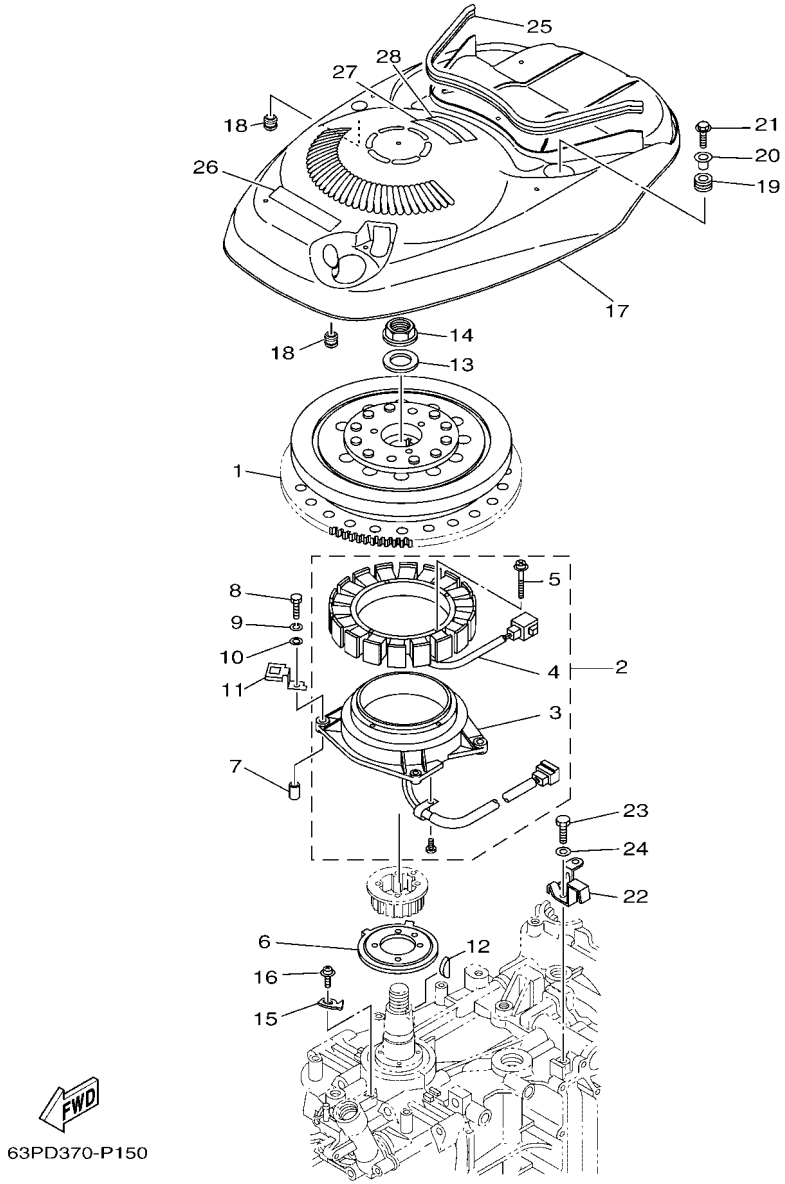

FIG. 15 GENERATOR GENERADOR

REF. NO.	PART NO. CODIGO Nº	DESCRIPTION DESCRIPCION	63PE	64PE				REMARKS OBSERVACIONES
1	63P–81450–00	ROTOR ASSY ROTOR COMPLETO	1	1				
2	63P–81460–00	BASE ASSY CONJUNTO BASE	1	1				
3	63P–85580–00	.COIL, PULSER .BOBINA DE PULSACION	1	1				
4	63P–81410–00	.STATOR ASSY .ESTATOR COMPLETO	1	1				
5	63D–81345–20	.SCREW, WITH WASHER (M6X30) .TORNILLO, CON ARANDELA (M6X30)	4	4				
6	63P–81673–01	ROTOR ROTOR	1	1				
7	99530–08012	PIN, DOWEL PASADOR, DE ESPIGA	2	2				
8	97095–06035	BOLT PERNO	4	4				
9	92995–06100	WASHER, SPRING ARANDELA	4	4				
10	92995–06600	WASHER ARANDELA	4	4				
11	63P–81845–00	PLATE PLACA	2	2				
12	90280–05015	KEY, WOODRUFF CUNA WOODRUFF	1	1				
13	90201–24014	WASHER, PLATE ARANDELA PLANA	1	1				
14	90179–24002	NUT TUERCA	1	1				
15	6P2–81332–00	PLATE, TIMING PLACA REGULADOR DE TIEMPO	1	1				
16	97985–06210	SCREW, WITH WASHER TORNILLO, CON ARANDELA	1	1				
17	63P–81337–10	COVER, FLYWHEEL CUBIERTA DE VOLANTE	1	1				
18	6A0–82317–00	DAMPER, IGNITION COIL AMORTIGUADOR BOBINA ENCENDIDO	2	2				
19	90480–15M31	GROMMET TAPON	1	1				
20	90387–06285	COLLAR ESPACIADOR	1	1				
21	95895–06020	BOLT, FLANGE TORNILLO DE REBORDE	1	1				
22	63P–8132G–10	PLATE PLACA	1	1				
23	97095–06016	BOLT PERNO	1	1				
24	92995–06600	WASHER ARANDELA	1	1				
25	6DA–42617–00	DAMPER, FORM HULE DE FORMA	1	1				
26	63P–13437–62	MARK, CAUTION MARKER	1	1				FOR CAR,CSA FOR CAR,CSA
27	6EE–81994–40	LABEL, SAFETY ETIQUETA DE SEGURIDAD	1	1				FOR CAR,CSA FOR CAR,CSA

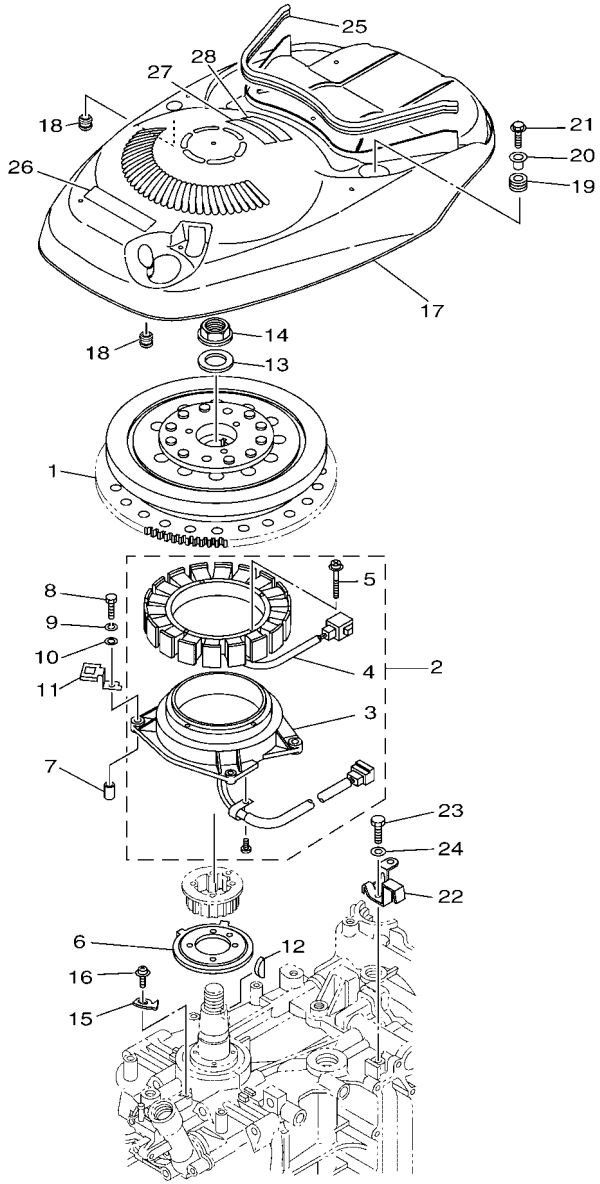

63PD370-P150

FIG. 15 GENERATOR GENERADOR

REF. NO.	PART NO. CODIGO Nº	DESCRIPTION DESCRIPCION	63PE	64PE				REMARKS OBSERVACIONES
27	6AH–81994–70	LABEL, SAFETY ETIQUETA DE SEGURIDAD	1	1				FOR BRA FOR BRA
28	6EE–81994–50	LABEL, SAFETY ETIQUETA DE SEGURIDAD	1	1				FOR CAR FOR CAR

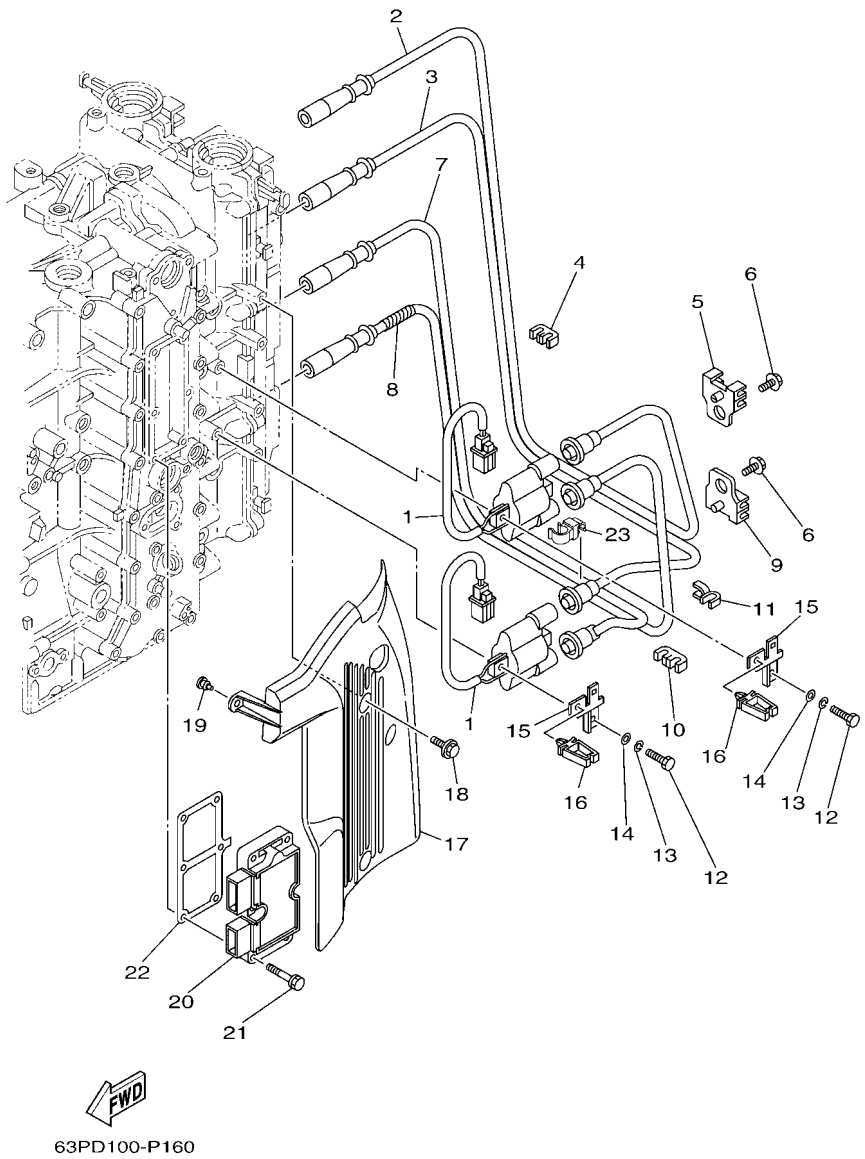

FIG. 16 ELECTRICAL 1 — EQUIPO ELECTRICO 1

REF. NO.	PART NO. CODIGO Nº	DESCRIPTION DESCRIPCION	63PE	64PE				REMARKS OBSERVACIONES
1	63P–82310–01	IGNITION COIL ASSY BOBINA DE ENCENDIDO COMPLETA	2	2				
2	63P–82341–00	CORD, HIGH TENSION 1 CABLE DE ALTA TENSION 1	1	1				
3	63P–82342–00	CORD, HIGH TENSION 2 CABLE DE ALTA TENSION 2	1	1				
4	67F–82361–00	CLAMP, CORD GRAMPA DE CABLE	1	1				
5	67F–82362–00	CLAMP, CORD 2 GRAMPA DE CABLE 2	1	1				
6	90119–06M09	BOLT, WITH WASHER TORNILLO CON ARANDELA	2	2				
7	63P–82343–00	CORD, HIGH TENSION 3 CABLE DE ALTA TENSION 3	1	1				
8	63P–82344–01	CORD, HIGH TENSION 4 CABLE DE ALTA TENSION 4	1	1				
9	67F–82362–00	CLAMP, CORD 2 GRAMPA DE CABLE 2	1	1				
10	67F–82361–00	CLAMP, CORD GRAMPA DE CABLE	1	1				
11	90464–07M41	CLAMP BRIDA	1	1				
12	97095–06025	BOLT PERNO	4	4				
13	92995–06100	WASHER, SPRING ARANDELA	4	4				
14	92995–06600	WASHER ARANDELA	4	4				
15	63P–82388–00	PLATE PLACA	2	2				
16	90464–05141	CLAMP BRIDA	2	2				
17	63P–82314–00	COVER, IGNITION COIL CUBIERTA BOBINA ENCENDIDO	1	1				
18	95895–06020	BOLT, FLANGE TORNILLO DE REBORDE	2	2				
19	90480–06M19	GROMMET TAPON	1	1				
20	63P–81960–01	RECTIFIER & REGULATOR ASSY RECTIFICADOR Y REGULADOR	1	1				
21	90119–06MA4	BOLT, WITH WASHER TORNILLO CON ARANDELA	6	6				
22	63P–81975–00	PLATE, RECTIFIER FITTING PLACA ACCESORIA RECTIF.	1	1				
23	90464–12017	CLAMP BRIDA	1	1				

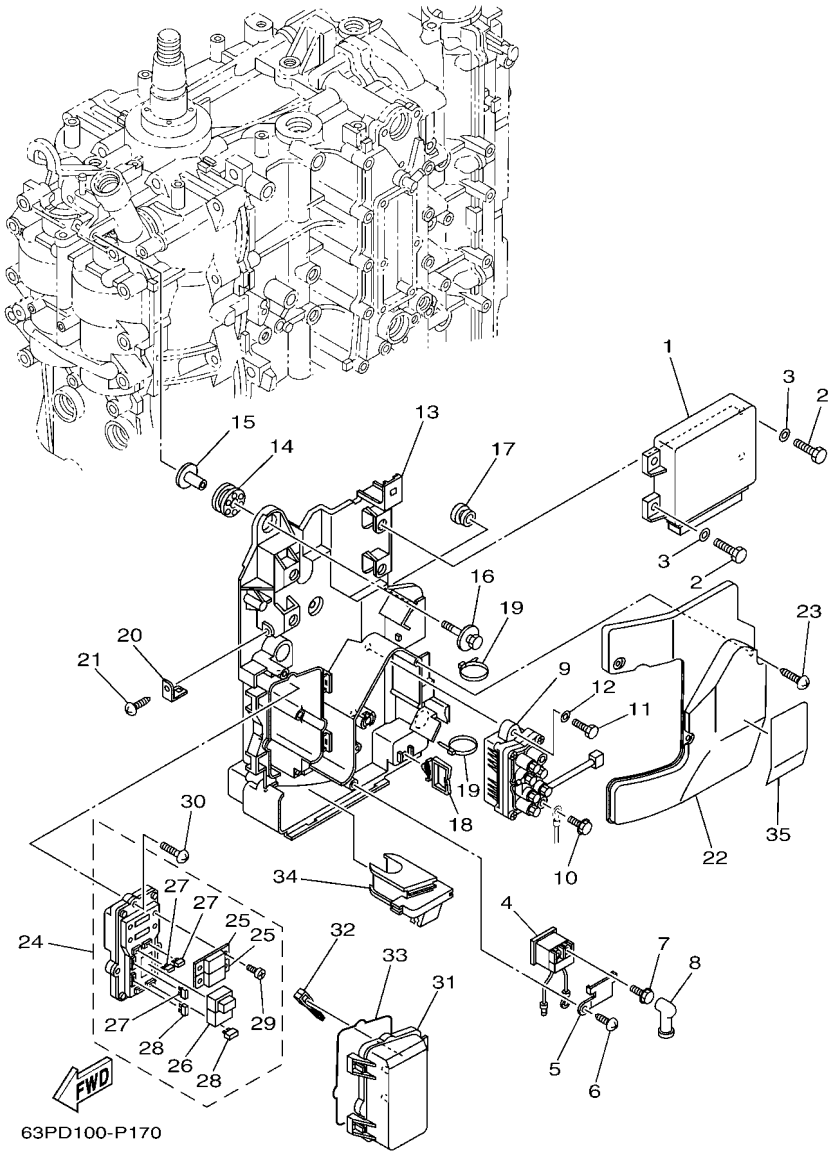

FIG. 17 ELECTRICAL 2 — EQUIPO ELECTRICO 2

REF. NO.	PART NO. CODIGO Nº	DESCRIPTION DESCRIPCION	63PE	64PE				REMARKS OBSERVACIONES
1	63P–8591A–38	ENGINE CONTROL UNIT ASSY UNIDAD CONTROL	1	1				FOR CAR,CSA FOR CAR,CSA
	63P–8591A–75	ENGINE CONTROL UNIT ASSY UNIDAD CONTROL	1	1				FOR BRA FOR BRA
2	97095–06016	BOLT PERNO	4	4				
3	92995–06600	WASHER ARANDELA	4	4				
4	68V–8194A–00	RELAY RELE	1	1				
5	68V–81953–00	STAY, RELAY SOPORTE DE RELE	1	1				
6	97780–60620	SCREW, TAPPING TORNILLO DE CABEZA DE CONO ACH	1	1				
7	97595–06610	BOLT, WITH WASHER PERNO CON ARANDELA	2	2				
8	6G5–82119–00	COVER, LEAD WIRE CUBIERTA DE CABLE CONDUCTOR	2	2				
9	63P–81950–00	RELAY ASSY RELE COMPLETO	1	1				
10	97595–06610	BOLT, WITH WASHER PERNO CON ARANDELA	2	2				
11	97013–06020	BOLT PERNO	2	2				
12	92903–06600	WASHER, PLATE RONDANA SENCILLA	2	2				
13	63P–81948–00	BRACKET SOPORTE	1	1				
14	68F–85516–01	SPACER ESPACIADOR	3	3				
15	90387–06176	COLLAR ESPACIADOR	3	3				
16	68F–85119–00	BOLT PERNO	3	3				
17	90480–10627	GROMMET TAPON	1	1				
18	90464–23199	CLAMP BRIDA	1	1				
19	90465–13M18	CLAMP BRIDA	3	3				
20	68V–85548–01	HOLDER SOSTEN	1	1				
21	97780–60620	SCREW, TAPPING TORNILLO DE CABEZA DE CONO ACH	1	1				
22	63P–81942–00	COVER CUBIERTA	1	1				
23	90169–05M00	SCREW, TRUSS HEAD TAPPING TORNILLO	3	3				
24	63P–82170–02	FUSE BOX ASSY CAJA DE FUSIBLES COMPL.	1	1				
25	63P–82151–00	.FUSE (50A) .FUSIBLE (50A)	2	2				
26	6AW–8195A–00	.RELAY ASSY .RELE COMPLETO	1	1				

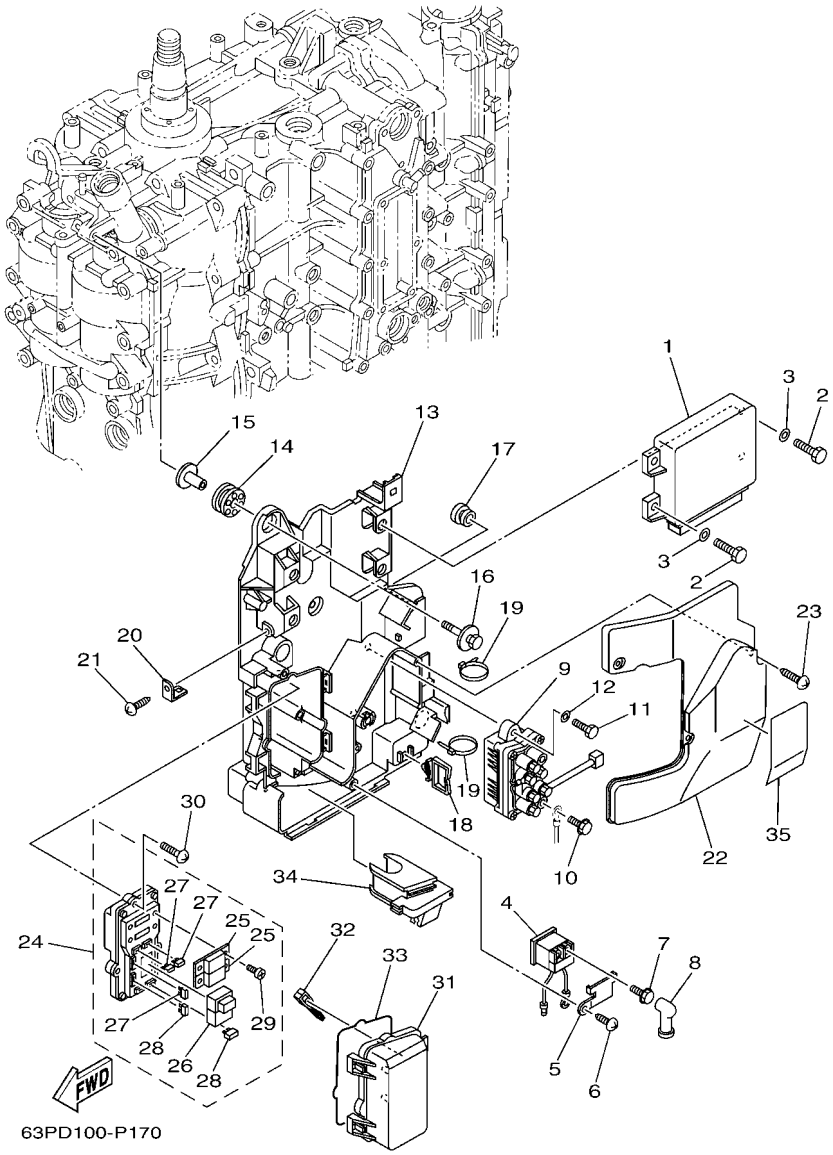

FIG. 17 ELECTRICAL 2 — EQUIPO ELECTRICO 2

REF. NO.	PART NO. CODIGO Nº	DESCRIPTION DESCRIPCION	63PE	64PE				REMARKS OBSERVACIONES
27	67F–82151–00	.FUSE (20A) .FUSIBLE (20A)	3	3				
28	67F–82151–10	.FUSE (30A) .FUSIBLE (30A)	2	2				
29	68F–82846–00	.SCREW, PAN HEAD (M5) .TORNILLO (M5)	4	4				
30	97780–50620	SCREW, TAPPING TORNILLO DE CABEZA DE CONO ACH	3	3				
31	60V–85544–00	CASE CAJA	1	1				
32	67F–2812A–00	PULLER, FUSE TIRADOR DE FUSIBLE	1	1				
33	68F–82176–00	DAMPER AMORTIGUADOR	1	1				
34	63P–81336–00	GROMMET TAPON PROTECTOR	1	1				
35	63P–81919–00	GRAPHIC, REGULATOR CALCAMONIA DE REGULADOR	1	1				

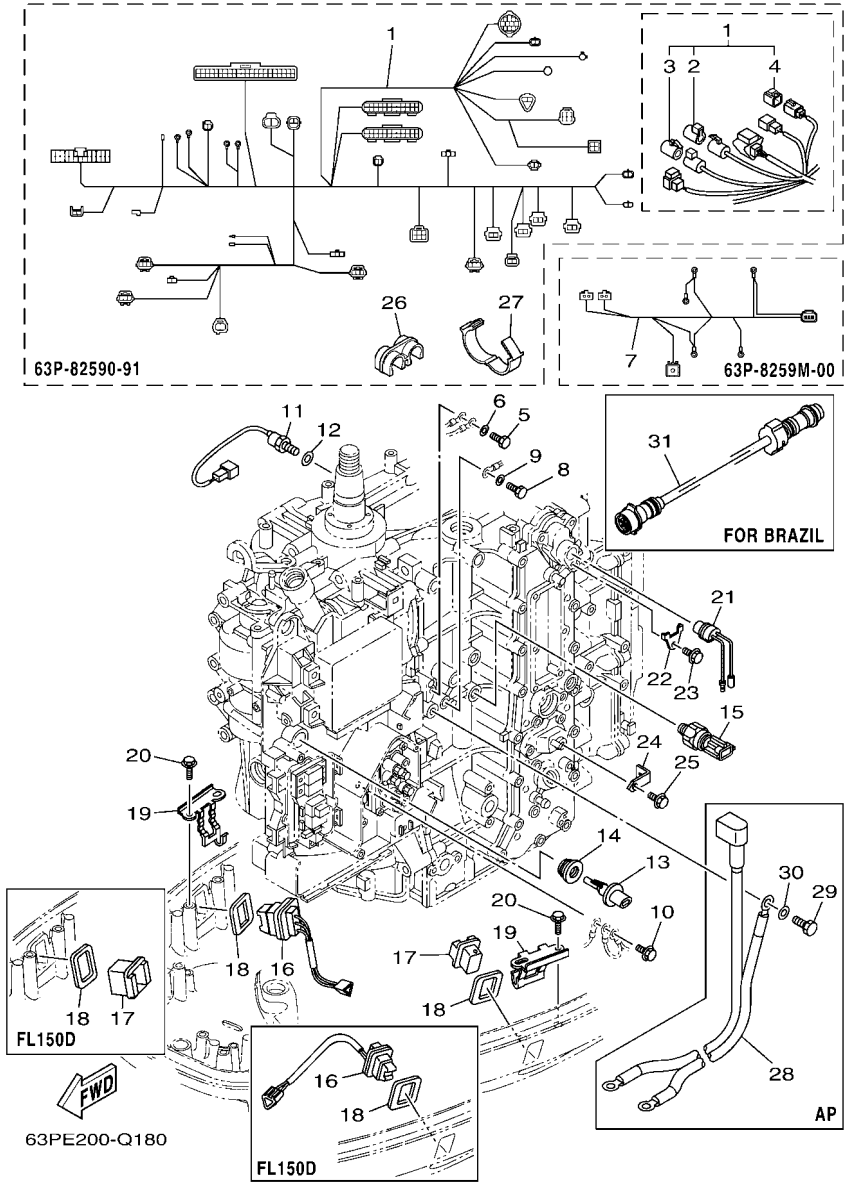

FIG. 18 ELECTRICAL 3 — EQUIPO ELECTRICO 3

REF. NO.	PART NO. CODIGO Nº	DESCRIPTION DESCRIPCION	63PE	64PE				REMARKS OBSERVACIONES
1	63P–82590–91	WIRE HARNESS ASSY CONJUNTO DE CABLES	1	1				
2	6DA–82582–00	.CAP 1 (FEMALE) .TAPA 1	1	1				
3	6DA–82582–10	.CAP 1 (MALE) .TAPA 1	1	1				
4	6Y8–82582–11	.CAP 1 (4PIN) .CUBIERTA DE ARNES DE CABLE	1	1				
5	97095–06016	BOLT PERNO	1	1				
6	92995–06600	WASHER ARANDELA	1	1				
7	63P–8259M–00	WIRE HARNESS ASSY 2 ARNES DE CABLES	1	1				
8	97095–06016	BOLT PERNO	1	1				
9	92995–06600	WASHER ARANDELA	1	1				
10	97595–06512	BOLT, WITH WASHER PERNO CON ARANDELA	1	1				
11	61A–85790–00	THERMOSENSOR ASSY TERMICA SENSORIO	1	1				
12	92990–10600	WASHER, PLATE ARANDELA PLANA	1	1				
13	63P–85886–00	SENSOR, AIR TEMPERATURE SENSOR	1	1				
14	63P–14435–00	GROMMET ANILLO PROTECTOR	1	1				
15	6AW–83651–00	SENDER, OIL PRESSURE TRASMISOR DE PRESION DE ACEITE	1	1				
16	69J–82563–01	TRIM & TILT SWITCH ASSY INTERRUPTOR DE INCLINACION	1	1				
17	69J–42723–01	COVER, BOTTOM CUBIERTA INFERIOR	1	1				
18	69J–82587–00	GASKET EMPAQUETADURA	2	2				
19	63P–83614–01	BRACKET SOPORTE	2	2				
20	90109–06M86	BOLT PERNO	4	4				
21	6P2–82560–01	THERMO SWITCH ASSY INTER. DE TERMO	1	1				
22	6E9–82588–00	PLATE PLACA	1	1				
23	90109–06M80	BOLT PERNO	1	1				
24	63P–8366P–01	BRACKET 4 SOPORTE 4	1	1				
25	97595–06512	BOLT, WITH WASHER PERNO CON ARANDELA	1	1				
26	90464–12224	CLAMP BRIDA	1	1				
27	90464–26001	CLAMP BRIDA	1	1				

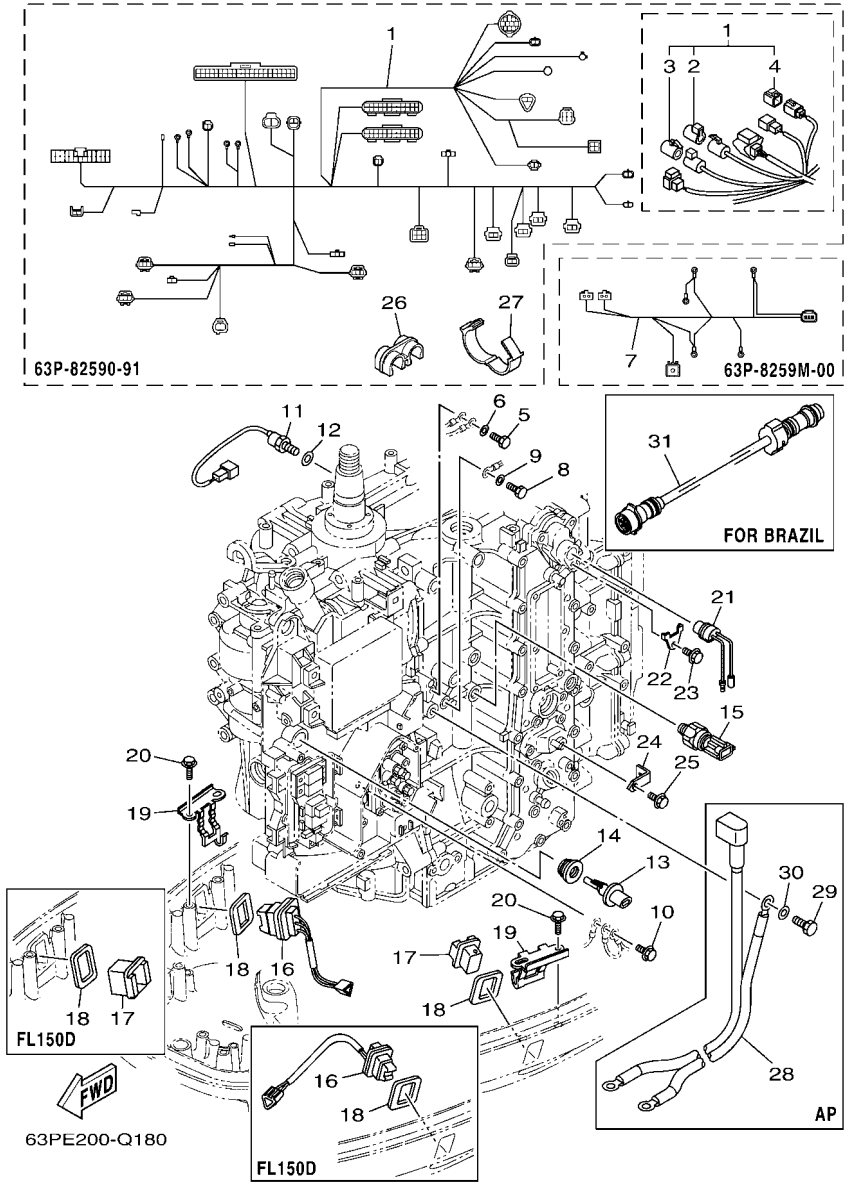

FIG. 18 ELECTRICAL 3 — EQUIPO ELECTRICO 3

REF. NO.	PART NO. CODIGO Nº	DESCRIPTION DESCRIPCION	63PE	64PE				REMARKS OBSERVACIONES
28	6DA–82105–01	BATTERY CABLE CABLE DE BATERIA	1	1				AP AP
29	97095–08016	BOLT PERNO	1	1				AP AP
30	92995–08600	WASHER ARANDELA	1	1				AP AP
31	688–8258A–10	EXTENSION, WIRE HARNESS (2M) EXTENSION, ARNES DE CABLES (2M	1					AP FOR BRA (10P) AP FOR BRA (10P)

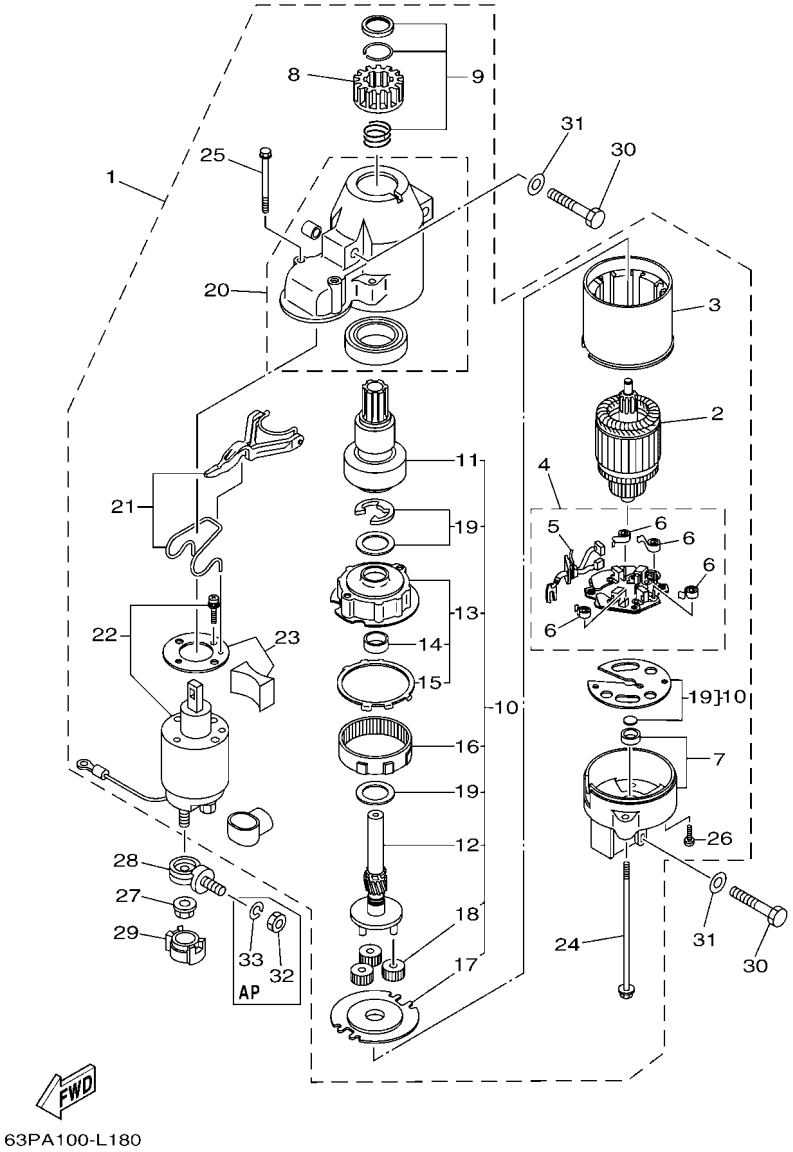

FIG. 19 STARTING MOTOR — MOTOR DE ARRANQUE

REF. NO.	PART NO. CODIGO Nº	DESCRIPTION DESCRIPCION	63PE	64PE				REMARKS OBSERVACIONES
1	6BR–81800–01	STARTING MOTOR ASSY MOTOR DE ARRANQUE COMPLETO	1	1				
2	67F–81850–00	.ARMATURE ASSY .INDUCIDO COMPLETO	1	1				
3	67F–81810–00	.STATOR ASSY .ESTATOR COMPLETO	1	1				
4	69J–81840–00	.BRUSH HOLDER ASSY .SOSTEN DE ESCOBILLA COMPLETO	1	1				
5	69J–81801–00	..BRUSH SET ..JUEGO DE ESCOBILLA	1	1				
6	67F–81813–00	..SPRING, BRUSH ..RESORTE DE ESCOBILLA	4	4				
7	67F–81820–00	.REAR BRACKET ASSY .CUBIERTA TRASERA COMPL	1	1				
8	67F–81808–00	.PINION ASSY .PINON	1	1				
9	67F–81857–00	.PINION STOPPER SET .JUEGO TAPON PINON	1	1				
10	67F–81807–00	.GEAR ASSY, STARTING MOTOR .PINON CONJUNTO	1	1				
11	67F–81832–00	..CLUTCH, OVER RUN ..PINON COMPL	1	1				
12	67F–81836–00	..SHAFT, PINION ..ARBOL, PINON	1	1				
13	67F–81821–00	..BRACKET, CENTER 1 ..SOPORTE, CENTRO 1	1	1				
14	67F–81841–00	...BEARING ...PORTADOR	1	1				
15	67F–8183R–00	...GASKET ...EMPAQUETADURA	1	1				
16	67F–81891–00	..GEAR, RING ..ENGRANAJE ANILLO	1	1				WITH 67F-8183R-00 WITH 67F-8183R-00
17	67F–81830–00	..BRACKET, CENTER 2 ..SOPORTE, CENTRO 2	1	1				
18	60V–8183T–00	..GEAR, IDLER ..ENGRENAJE NEUTRO	3	3				
19	67F–81809–00	..WASHER KIT ..JUEGO DE ARANDELA	1	1				
20	69J–81842–00	.COVER .TAPA	1	1				
21	6C5–81839–00	.LEVER ASSY .PALANCA COMPL.	1	1				
22	63P–81941–00	.STARTER RELAY ASSY .RELE DE ARRANQUE	1	1				
23	6C5–81869–00	.COVER, DUST .CUBIERTA PARA POLVO	1	1				
24	6K7–81826–11	.BOLT .PERNO	2	2				
25	69J–81828–00	.SCREW 2 .TORNILLO DE EMPUJE 2	2	2				
26	67F–81846–00	.SCREW .TORNILLO	2	2				
27	90179–08003	NUT TUERCA	1	1				

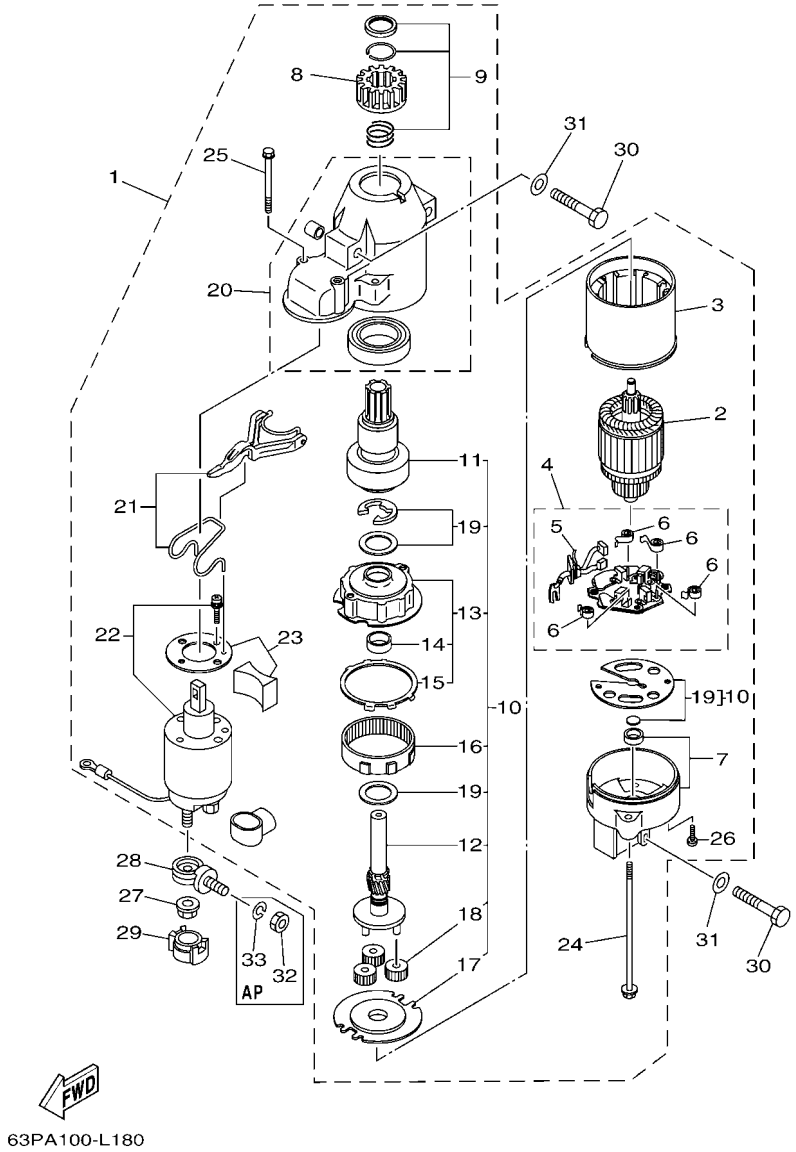

FIG. 19 STARTING MOTOR — MOTOR DE ARRANQUE

REF. NO.	PART NO. CODIGO Nº	DESCRIPTION DESCRIPCION	63PE	64PE				REMARKS OBSERVACIONES
28	60V–81925–00	TERMINAL TERMINAL	1	1				
29	68F–82582–00	COVER, WIRE HARNESS CUBIERTA DE ARNES DE CABLE	1	1				
30	97013–08045	BOLT PERNO	3	3				
31	92903–08600	WASHER, PLATE RONDANA SENCILLA	3	3				
32	95333–08600	NUT TUERCA	1	1				AP AP
33	92903–08100	WASHER, SPRING RONDANA SENCILLA	1	1				AP AP

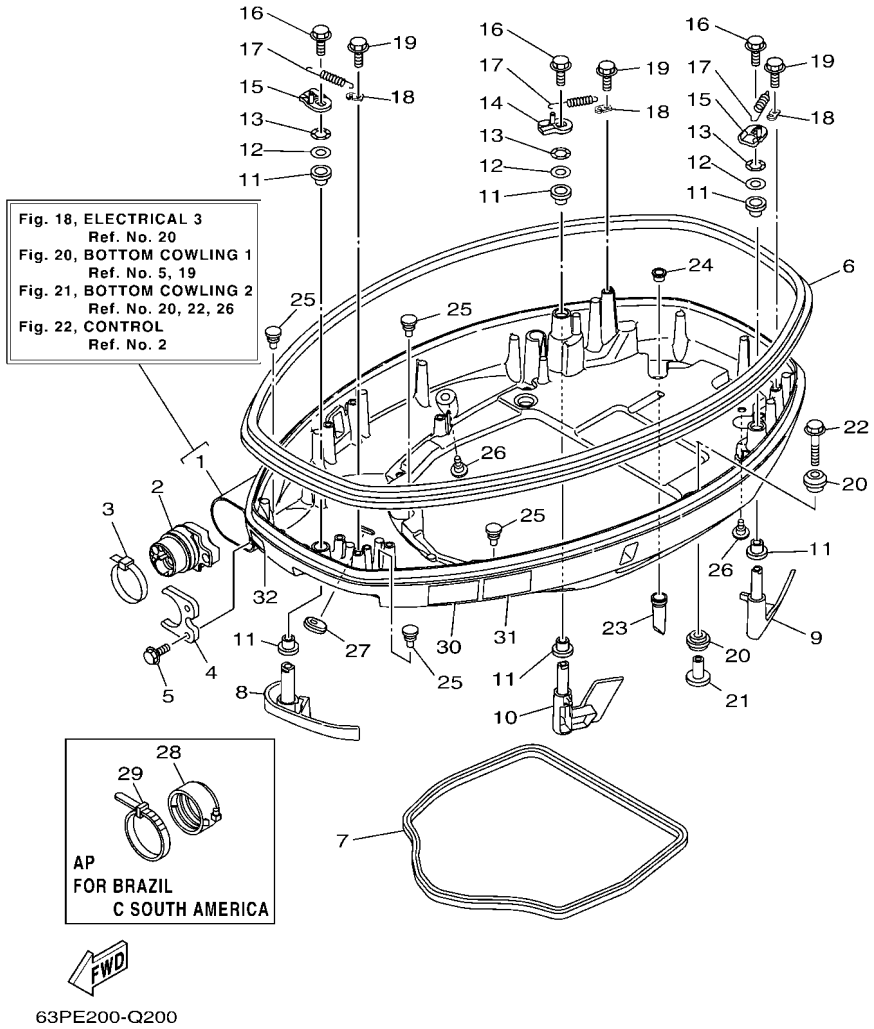

FIG. 20 BOTTOM COWLING 1 — CUBIERTA INFERIOR 1

REF. NO.	PART NO. CODIGO Nº	DESCRIPTION DESCRIPCION	63PE	64PE				REMARKS OBSERVACIONES
1	63P–42710–10–8D	BOTTOM COWLING ASSY CUBIERTA INFERIOR COMPL.	1	1				
2	6DA–42725–00	GROMMET TAPON	1	1				
3	90465–13M30	CLAMP BRIDA	1	1				FOR CAR FOR CAR
4	6CB–42761–00	STOPPER RETEN 1	1	1				
5	90109–06M86	BOLT PERNO	2	2				
6	63P–42615–10	SEAL SELLO	1	1				
7	63P–42716–00	RUBBER, SEAL 1 SELLO DE GOMA 1	1	1				
8	63P–42815–10–8D	LEVER, CLAMP PALANCA ABRAZADERA	1	1				
9	6DA–42816–01–8D	LEVER, CLAMP PALANCA ABRAZADERA	1	1				
10	6DA–42817–01–8D	LEVER, CLAMP PALANCA ABRAZADERA	1	1				
11	90386–15M73	BUSH BUJE	6	6				
12	90201–156J2	WASHER, PLATE ARANDELA PLANA	3	3				
13	90206–15M18	WASHER, WAVE ARANDELA ONDULADA	3	3				
14	6CB–42818–00	LEVER, CLAMP PALANCA, ABRAZADERA	1	1				
15	6CB–42819–00	LEVER, CLAMP PALANCA ABRAZADERA	2	2				
16	95895–08012	BOLT, FLANGE TORNILLO DE REBORDE	3	3				
17	90506–22001	SPRING, TENSION RESORTE DE TENSION	3	3				
18	66T–43144–00	HOOK, SPRING GANCHO	3	3				
19	90109–06M86	BOLT PERNO	3	3				
20	90480–22M81	GROMMET TAPON	8	8				
21	90387–08M37	COLLAR ESPACIADOR	4	4				
22	90119–08M22	BOLT, WITH WASHER TORNILLO CON ARANDELA	4	4				
23	6DA–42717–00	RUBBER, SEAL 2 GOMA	4	4				
24	6DA–42384–00	SEAL, CAP SELLO DE TAPA	4	4				
25	6H4–42748–00	GROMMET TAPON	4	4				
26	6P2–44391–00	NIPPLE, HOSE NIPLE MANGUERA	2	2				
27	61A–42727–00	GROMMET TAPON	1	1				

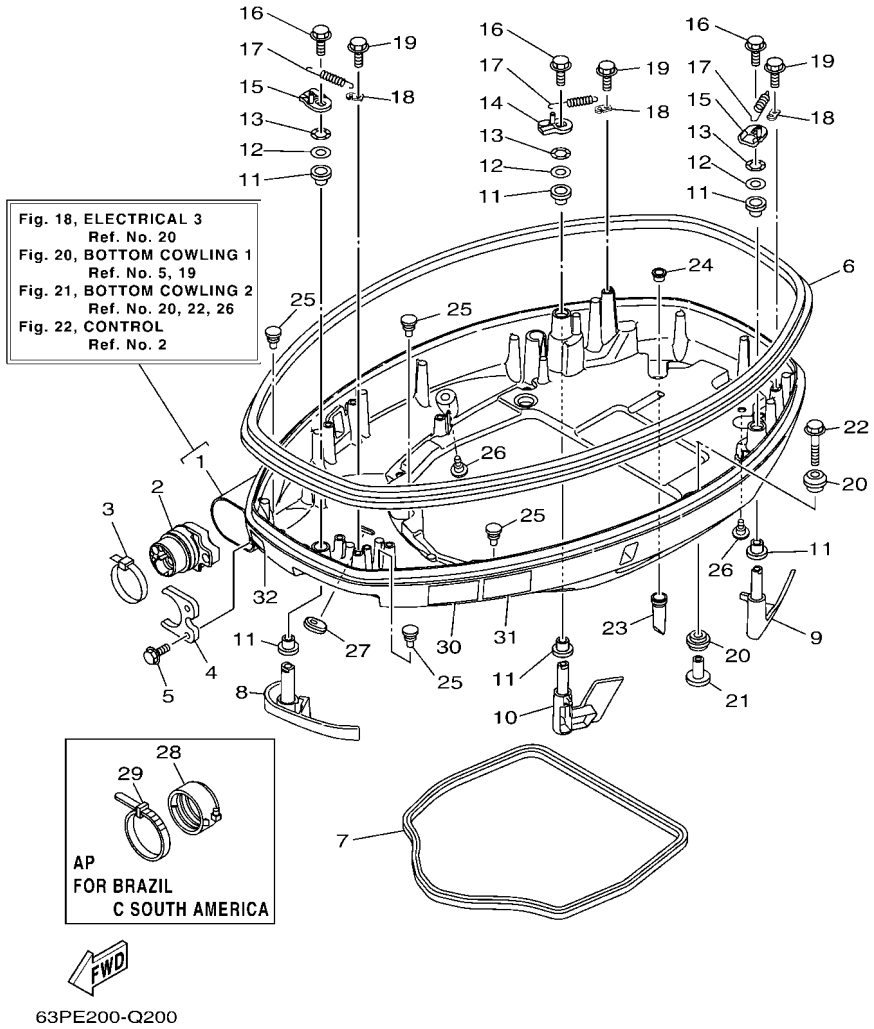

FIG. 20 BOTTOM COWLING 1 — CUBIERTA INFERIOR 1

REF. NO.	PART NO. CODIGO Nº	DESCRIPTION DESCRIPCION	63PE	64PE				REMARKS OBSERVACIONES
28	68F–42753–00	FASTNER TIRADOR	1	1				AP FOR BRA,CSA AP FOR BRA,CSA
29	90464–20258	CLAMP BRIDA	1	1				AP FOR BRA,CSA AP FOR BRA,CSA
30	6EE–42794–40	LABEL, WARNING (GENERAL) ETIQUETA DE PRECAUCION	1	1				FOR CAR,CSA FOR CAR,CSA
	6AH–42794–70	LABEL, WARNING (GENERAL) ETIQUETA DE PRECAUCION	1	1				FOR BRA FOR BRA
31	6EE–42794–50	LABEL, WARNING (GENERAL) ETIQUETA DE PRECAUCION	1	1				FOR CAR FOR CAR
32	6AH–81996–00	MARK MARCA	1	1				FOR CAR FOR CAR

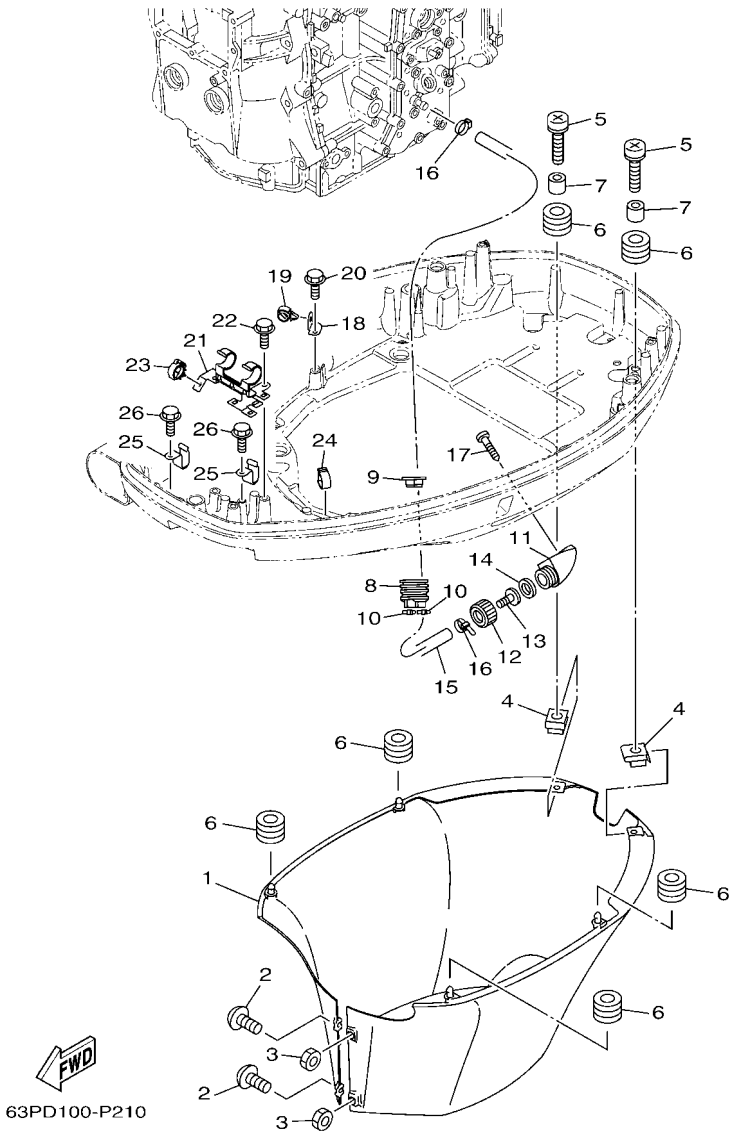

FIG. 21 BOTTOM COWLING 2 — CUBIERTA INFERIOR 2

REF. NO.	PART NO. CODIGO Nº	DESCRIPTION DESCRIPCION	63PE	64PE				REMARKS OBSERVACIONES
1	6DA–42741–10–8D	APRON MANDIL	1	1				
2	90159–06M28	SCREW, WITH WASHER TORNILLO CON VALONA	2	2				
3	95380–06600	NUT, HEXAGON TUERCA	2	2				
4	90183–061A6	NUT, SPRING TUERCA DE RESORTE	2	2				
5	90159–06053	SCREW, WITH WASHER TORNILLO CON VALONA	2	2				
6	90480–13M24	GROMMET TAPON	6	6				
7	90387–06M43	COLLAR ESPACIADOR	2	2				
8	6H1–42726–21	GROMMET TAPON	1	1				
9	6BG–42384–00	SEAL, CAP SELLO DE TAPA	1	1				
10	90465–11M10	CLAMP BRIDA	2	2				
11	6AW–12572–00	ADAPTER ADAPTADOR	1	1				
12	6R3–12581–00	JOINT, HOSE 1 CONEXION	1	1				
13	6R3–12582–00	JOINT, HOSE 2 CONEXION	1	1				
14	6R3–12583–00	GASKET, HOSE JOINT EMPAQUETADURA JUNTA DE MANGUE	1	1				
15	63P–42541–10	PIPE 1 TUBO 1	1	1				
16	90465–11M10	CLAMP BRIDA	2	2				
17	97780–60520	SCREW, TAPPING TORNILLO DE CABEZA DE CONO ACH	2	2				
18	63P–42756–00	STAY, CLAMP SOPORTE DE GRAMPA	1	1				
19	90464–13249	CLAMP BRIDA	1	1				
20	90109–06M86	BOLT PERNO	1	1				
21	63P–8366G–00	BRACKET 3 SOPORTE 3	1	1				
22	90109–06M86	BOLT PERNO	2	2				
23	90464–18246	CLAMP BRIDA	2	2				
24	90464–18004	CLAMP BRIDA	1	1				
25	90462–12013	CLAMP BRIDA	2	2				
26	90109–06M86	BOLT PERNO	2	2				

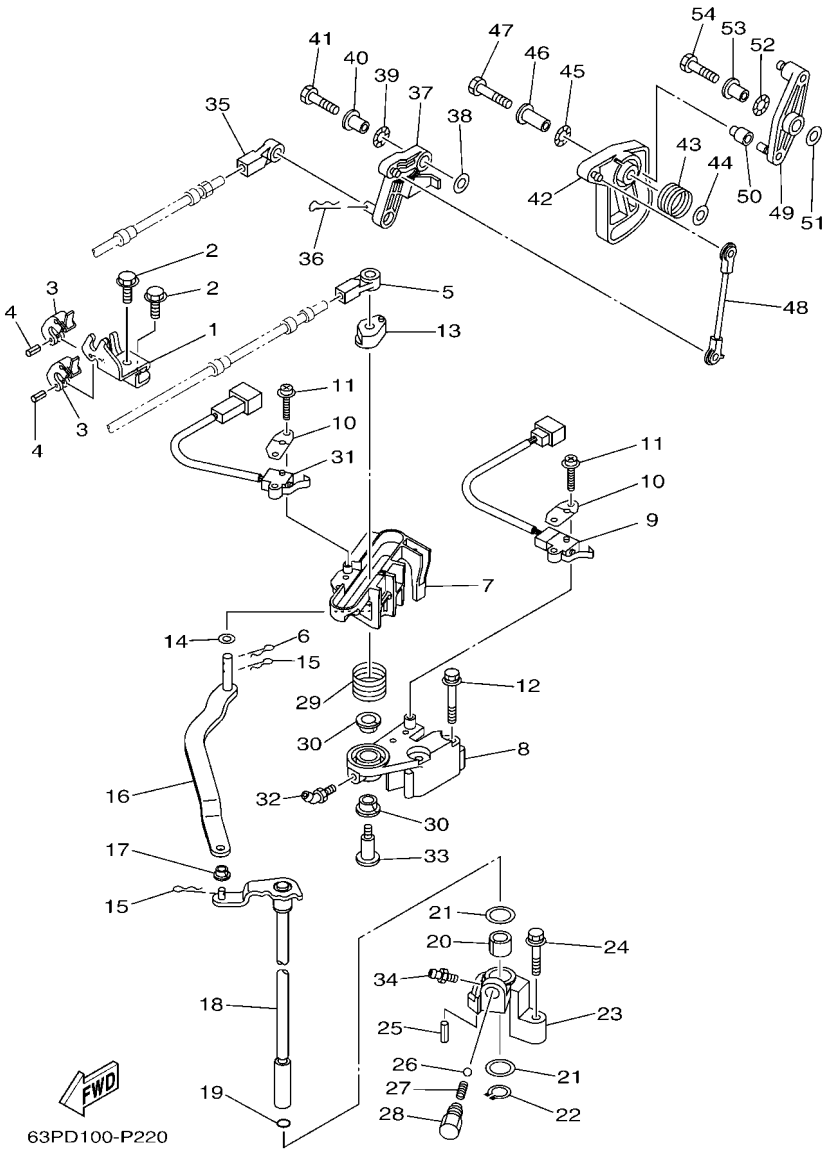

FIG. 22 CONTROL

CONTROL

REF. NO.	PART NO. CODIGO Nº	DESCRIPTION DESCRIPCION	63PE	64PE				REMARKS OBSERVACIONES
1	63P–48531–10	BRACKET, REMOTE CONTROL 1 SOPORTE DE CONTROL REMOTO	1	1				
2	90109–06M86	BOLT PERNO	2	2				
3	6E5–48538–00	CLAMP, CABLE GRAMPA DE CABLE	2	2				
4	91690–30010	PIN, SPRING PASADOR DE RESORTE	2	2				
5	6E5–48344–00	CABLE END, REMOTE CONTROL BASE CONTROL	1	1				
6	90468–18008	CLIP PRESILLA	1	1				
7	6DA–44176–00	BRACKET SOPORTE	1	1				
8	63P–44117–01	BRACKET SOPORTE	1	1				
9	69J–8259F–00	SWITCH ASSY INTERRUPTOR	1	1				
10	61A–82588–01	PLATE PLACA	2	2				
11	97985–04116	SCREW, WITH WASHER TORNILLO, CON ARANDELA	4	4				
12	97595–06550	BOLT, WITH WASHER PERNO CON ARANDELA	2	2				
13	63P–44122–00	BUSHING, SHIFT ROD LEVER BUJE PALANCA VARILLA DE CAMBIO	1	1				
14	90202–08M20	WASHER, PLATE ARANDELA DE PLANA	1	1				
15	90468–18008	CLIP PRESILLA	2	2				
16	6DA–44121–00	LEVER, SHIFT ROD PALANCA VARILLA CAMBIOS	1	1				
17	90386–06M12	BUSH BUJE	1	1				
18	6DA–44120–11	HANDLE GEAR SHIFT ASSY MANIJA DE CAMBIO COMPL	1	1				
19	93210–09165	O-RING ANILLO O	1	1				
20	90386–16M66	BUSH BUJE	1	1				
21	90202–16061	WASHER, PLATE ARANDELA DE PLANA	2	2				
22	93410–16006	CIRCLIP SEGURO	1	1				
23	63P–44118–00	BRACKET SOPORTE	1	1				
24	97575–06535	BOLT, WITH WASHER PERNO CON ARANDELA	1	1				
25	91690–30010	PIN, SPRING PASADOR DE RESORTE	1	1				
26	93501–04M02	BALL BOLA	1	1				
27	90501–12082	SPRING, COMPRESSION RESORTE DE COMPRESION	1	1				

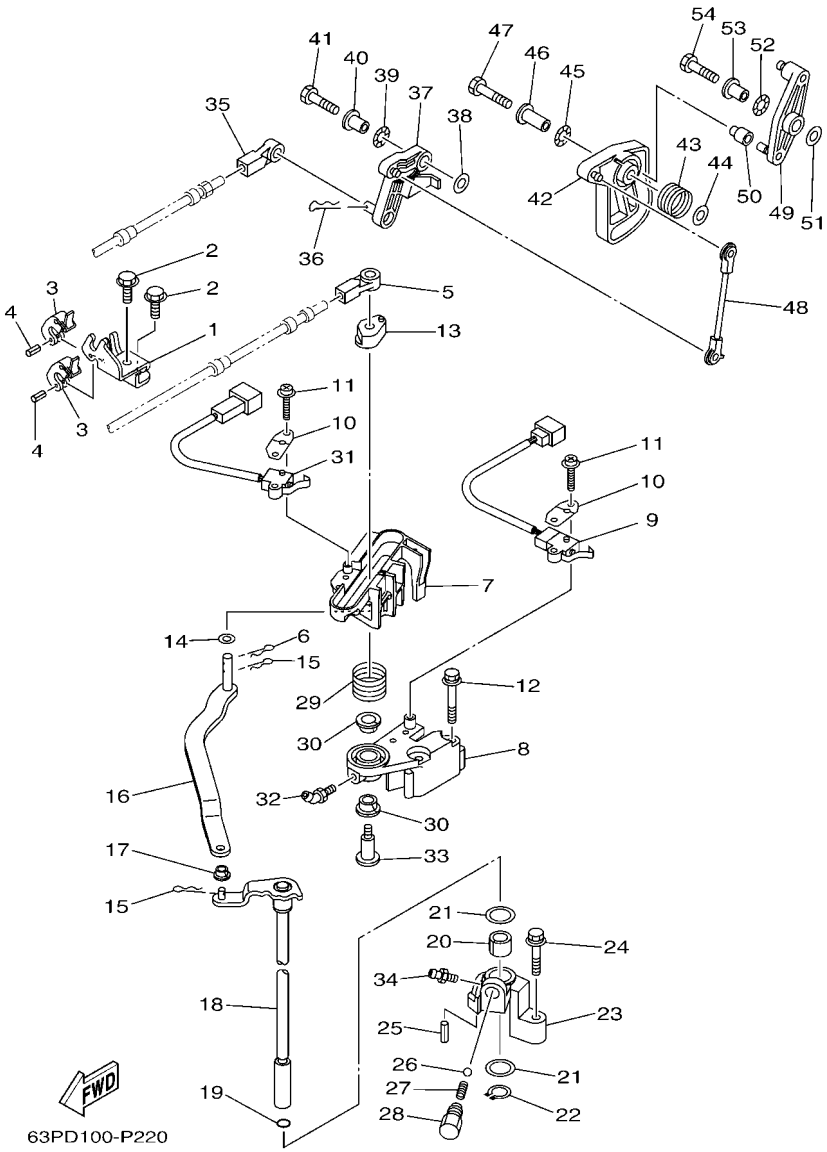

FIG. 22 CONTROL

CONTROL

REF. NO.	PART NO. CODIGO Nº	DESCRIPTION DESCRIPCION	63PE	64PE				REMARKS OBSERVACIONES
28	648–42715–00	BUSHING BUJE	1	1				
29	90508–20M31	SPRING, TORSION RESORTE DE TORSION	1	1				
30	90386–12069	BUSH BUJE	2	2				
31	60V–8259F–00	SWITCH ASSY INTERRUPTOR	1	1				
32	93700–06M01	NIPPLE, GREASE BOQUILLA DE ENGRASAR	1	1				
33	90109–08019	BOLT PERNO	1	1				
34	93700–06M03	NIPPLE, GREASE BOQUILLA DE ENGRASAR	1	1				
35	6E5–48344–00	CABLE END, REMOTE CONTROL BASE CONTROL	1	1				
36	90468–18008	CLIP PRESILLA	1	1				
37	63P–42154–10	LEVER, THROTTLE CONTROL PALANCA CONTROL ACELERADOR	1	1				
38	90201–06M31	WASHER, PLATE ARANDELA PLANA	1	1				
39	90206–10M04	WASHER, WAVE ARANDELA ONDULADA	1	1				
40	90387–06M29	COLLAR ESPACIADOR	1	1				
41	97095–06025	BOLT PERNO	1	1				
42	63P–41213–00	CAM, ACCEL. LEVA ACELERADOR	1	1				
43	69J–44135–00	SPRING RESORTE	1	1				
44	90201–06M31	WASHER, PLATE ARANDELA PLANA	1	1				
45	90206–10M04	WASHER, WAVE ARANDELA ONDULADA	1	1				
46	90387–06M82	COLLAR ESPACIADOR	1	1				
47	97095–06035	BOLT PERNO	1	1				
48	63P–41237–00	JOINT, LINK CONECTOR	1	1				
49	63P–42157–00	LEVER, THROTTLE PALANCA DE ACELERADOR	1	1				
50	68V–42171–00	BUSHING BUJE	1	1				
51	90201–06M31	WASHER, PLATE ARANDELA PLANA	1	1				
52	90206–10M04	WASHER, WAVE ARANDELA ONDULADA	1	1				
53	90387–06M29	COLLAR ESPACIADOR	1	1				
54	97095–06025	BOLT PERNO	1	1				

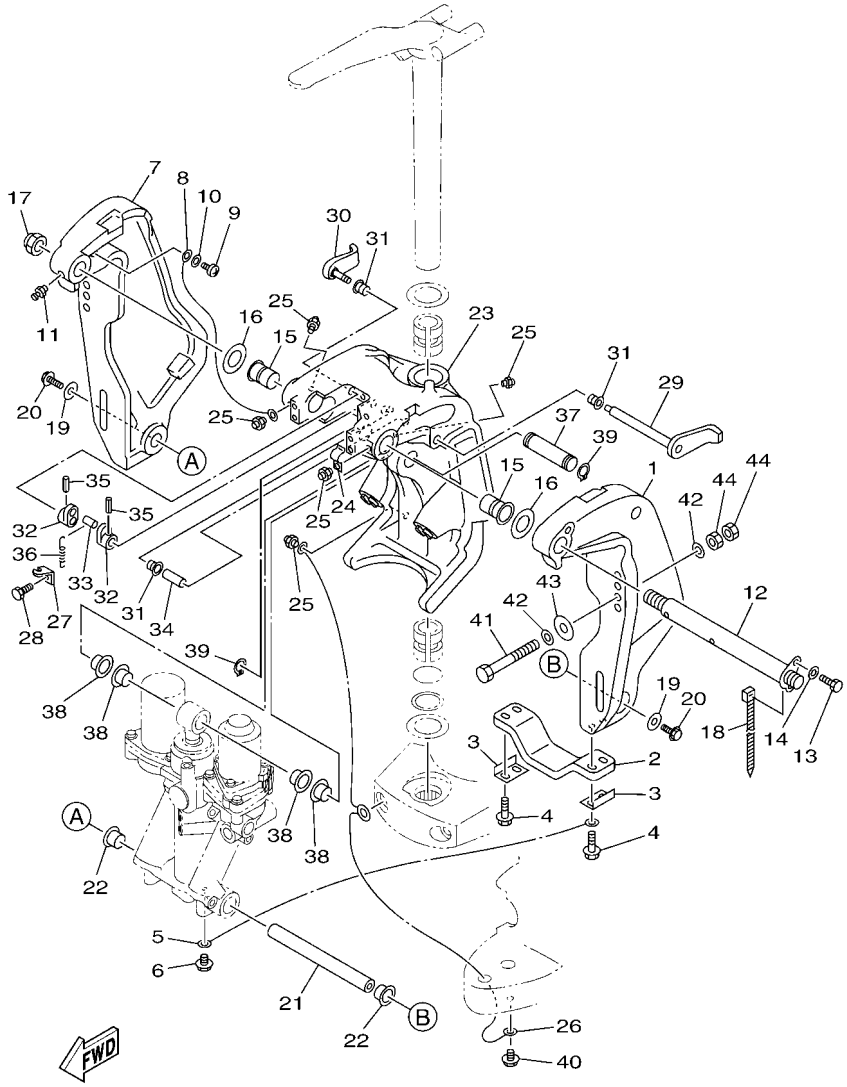

FIG. 23 BRACKET 1 — SOPORTE 1

REF. NO.	PART NO. CODIGO Nº	DESCRIPTION DESCRIPCION	63PE	64PE				REMARKS OBSERVACIONES
1	64E–43111–02–8D	BRACKET, CLAMP 1 SOPORTE DE LA ABRAZADERA 1	1	1				
2	6G5–45251–02	ANODE CATODE	1	1				
3	6G5–44526–00	PLATE PLACA 1	2	2				
4	97595–06530	BOLT, WITH WASHER PERNO CON ARANDELA	4	4				
5	6E5–82148–00	WIRE, LEAD 4 CABLE CONDUCTOR 4	1	1				
6	97595–06510	BOLT, WITH WASHER PERNO CON ARANDELA	1	1				
7	64E–43112–02–8D	BRACKET, CLAMP 2 SOPORTE DE LA ABRAZADERA 2	1	1				
8	6E5–82148–00	WIRE, LEAD 4 CABLE CONDUCTOR 4	1	1				
9	97885–06012	SCREW, PAN HEAD TORNILLO A MUESCA	1	1				
10	92995–06600	WASHER ARANDELA	1	1				
11	93700–06M03	NIPPLE, GREASE BOQUILLA DE ENGRASAR	1	1				
12	64E–43131–01	BOLT, CLAMP BRACKET TORNILLO DE ABRAZADERA DEL SOP	1	1				
13	97095–08020	BOLT PERNO	1	1				
14	92995–08600	WASHER ARANDELA	1	1				
15	90386–25M31	BUSH BUJE	2	2				
16	90201–26M59	WASHER, PLATE ARANDELA PLANA	2	2				
17	90185–22M11	NUT, SELF-LOCKING TUERCA AUTOBLOCANTE	1	1				
18	90465–11M10	CLAMP BRIDA	1	1				
19	90201–10060	WASHER, PLATE ARANDELA PLANA	2	2				
20	97575–10530	BOLT, WITH WASHER PERNO CON ARANDELA	2	2				
21	6BC–43818–00	PIN, LOWER SHOCK MOUNT PASADOR AMORTIGUADOR INFERIOR	1	1				
22	90386–22M98	BUSH BUJE	2	2				
23	64E–43311–10–8D	BRACKET, SWIVEL 1 SOPORTE GIRATORIO 1	1	1				
24	90465–08M63	CLAMP BRIDA	1	1				
25	93700–06M03	NIPPLE, GREASE BOQUILLA DE ENGRASAR	5	5				
26	66K–82149–00	WIRE, LEAD 3 CABLE CONDUCTOR 3	1	1				
27	6G5–43144–00	HOOK, SPRING GANCHO	1	1				

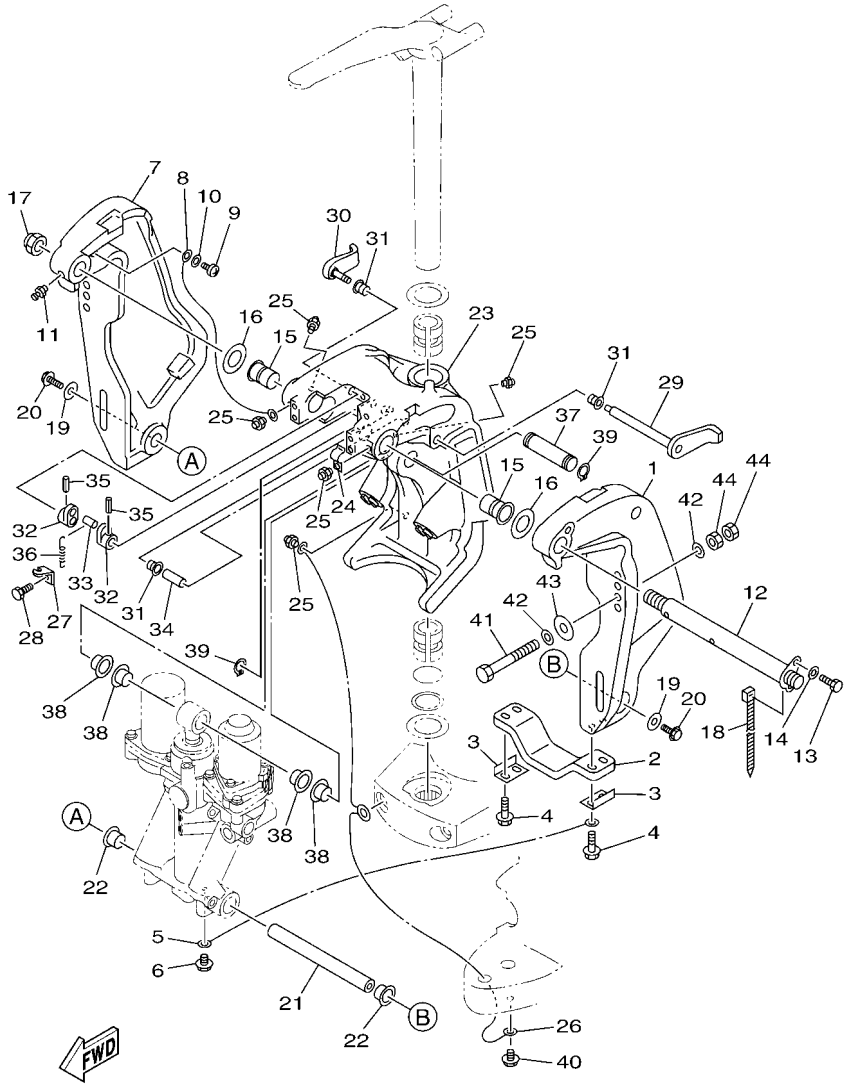

FIG. 23 BRACKET 1 — SOPORTE 1

REF. NO.	PART NO. CODIGO Nº	DESCRIPTION DESCRIPCION	63PE	64PE				REMARKS OBSERVACIONES
28	97095–06010	BOLT PERNO	1	1				
29	6G5–43181–02	LEVER, TILT STOP 1 PALANCA TOPE INCLINACION 1	1	1				
30	6G5–43185–02	LEVER, TILT STOP 2 PALANCA TOPE INCLINACION 2	1	1				
31	90386–10M16	BUSH BUJE	3	3				
32	6G5–43148–00	COLLAR, DISTANCE COLLAR	2	2				
33	90249–06M19	PIN PASADOR	1	1				
34	90387–10M05	COLLAR ESPACIADOR	1	1				
35	91690–30020	PIN, SPRING PASADOR DE RESORTE	2	2				
36	90506–16003	SPRING, TENSION RESORTE DE TENSION	1	1				
37	64E–43126–10	PIN, UPPER SHOCK MOUNT PASADOR DE AMORTIGUADOR SUPERI	1	1				
38	90386–22M98	BUSH BUJE	4	4				
39	93410–22M11	CIRCLIP SEGURO	2	2				
40	95895–06010	BOLT, FLANGE TORNILLO DE REBORDE	1	1				
41	90101–12M05	BOLT (L:130MM) TORNILLO (L:130MM)	4	4				FOR CAR,CSA FOR CAR,CSA
	90101–12M05	BOLT (L:130MM) TORNILLO (L:130MM)	2	2				FOR BRA FOR BRA
	90101–12047	BOLT (L:150MM) TORNILLO (L:150MM)	2	2				FOR BRA FOR BRA
42	90201–13M01	WASHER, PLATE ARANDELA PLANA	8	8				
43	90201–12426	WASHER, PLATE ARANDELA PLANA	4	4				
44	95380–12600	NUT TUERCA	8	8				

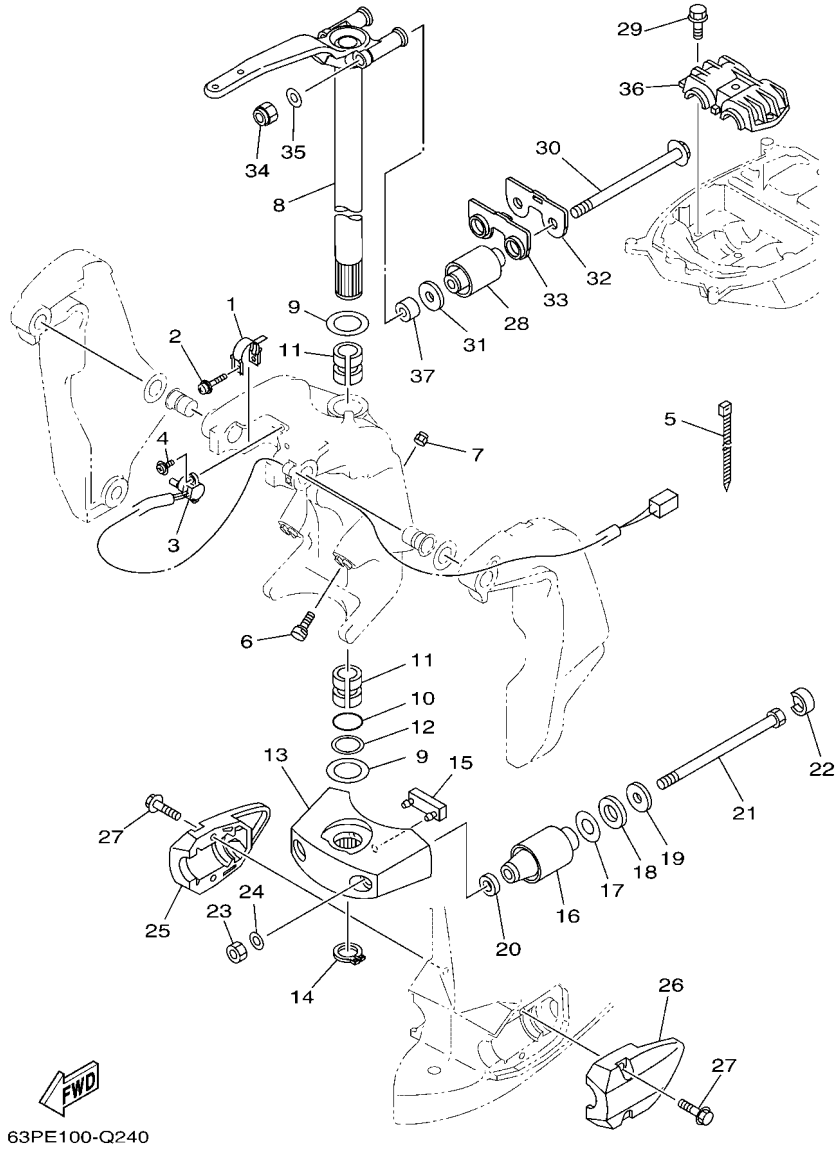

FIG. 24 BRACKET 2 — SOPORTE 2

REF. NO.	PART NO. CODIGO Nº	DESCRIPTION DESCRIPCION	63PE	64PE				REMARKS OBSERVACIONES
1	64E–43139–10	CAM, TRIM SENDER LEVA TRANSMISOR DE INCLINDOR	1	1				
2	90159–05059	SCREW, WITH WASHER TORNILLO CON VALONA	1	1				
3	67H–83672–01	TRIM SENDER TRANSMISOR DE INCLINADOR	1	1				
4	97985–06216	SCREW, WITH WASHER TORNILLO, CON ARANDELA	2	2				
5	90465–11M10	CLAMP BRIDA	3	3				
6	61A–43376–00	BOLT, THRUST RECEIVER TORNILLO RECEPTOR	2	2				
7	95780–10300	NUT, FLANGE TUERCA	2	2				
8	6DA–42510–10–8D	STEERING BRACKET ASSY SOPORTE DIRECCION COMPL.	1	1				
9	90201–38M60	WASHER, PLATE ARANDELA PLANA	2	2				
10	93210–37MH7	O-RING ANILLO O	1	1				
11	90386–38M32	BUSH BUJE	2	2				
12	90202–40M47	WASHER, PLATE ARANDELA DE PLANA	1	1				
13	68V–44551–00–8D	HOUSING, LOWER MOUNT RUBBER 1 CAJA AMORTIGUADOR INFERIOR HU	1	1				
14	93410–37M04	CIRCLIP SEGURO	1	1				
15	61A–44575–00	DAMPER, LOWER MOUNT RUBBER AMORTIGUADOR INFERIOR	1	1				
16	60V–44555–00	MOUNT DAMPER, LOWER SIDE AMORTIGUADOR DE HULE LADO INFE	2					L(20.3") L(20.3")
	63P–44555–00	MOUNT DAMPER, LOWER SIDE AMORTIGUADOR DE HULE LADO INFE	2	2				X(25.3") X(25.3")
17	90201–35008	WASHER, PLATE ARANDELA PLANA	2	2				
18	90202–32M19	WASHER, PLATE ARANDELA DE PLANA	2	2				
19	90201–16M55	WASHER, PLATE ARANDELA PLANA	2	2				
20	90201–15M58	WASHER, PLATE ARANDELA PLANA	2	2				
21	90109–14007	BOLT PERNO	2	2				
22	69J–44533–00	DAMPER, UPPER MOUNT RUBBER AMORTIGUADOR SUPERIOR	2	2				
23	95380–14600	NUT TUERCA	2	2				
24	92995–14600	WASHER ARANDELA	2	2				
25	63P–44553–00–8D	COVER, LOWER MOUNT CUBIERTA,AMORTIGUADOR INFERIOR	1	1				
26	63P–44556–00–8D	COVER, LOWER MOUNT 2 CUBIERTA,AMORTIGUADOR INFERIOR	1	1				

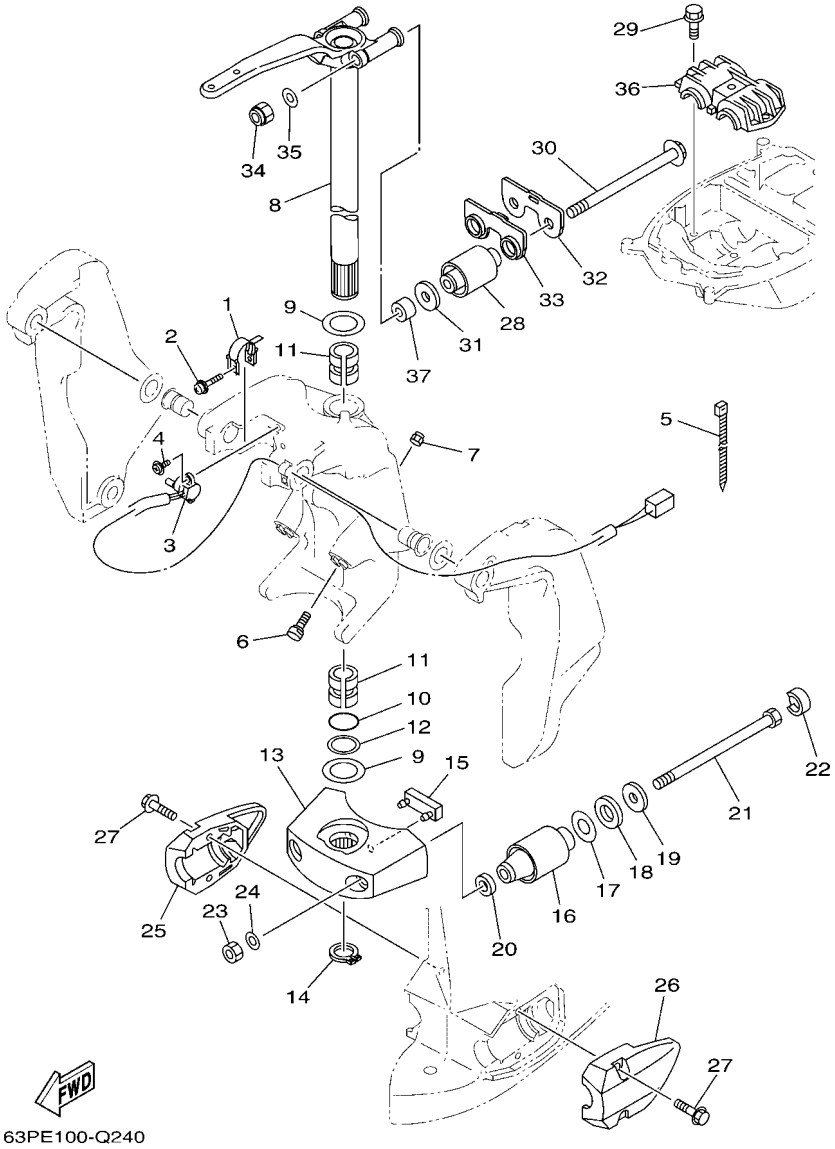

FIG. 24 BRACKET 2 — SOPORTE 2

REF. NO.	PART NO. CODIGO Nº	DESCRIPTION DESCRIPCION	63PE	64PE				REMARKS OBSERVACIONES
27	97575–10540	BOLT, WITH WASHER PERNO CON ARANDELA	4	4				
28	6DA–44514–00	MOUNT DAMPER, UPPER SIDE AMORTIGUADOR LADO SUPERIOR	2	2				
29	90119–10024	BOLT, WITH WASHER TORNILLO CON ARANDELA	3	3				
30	90105–14009	BOLT, FLANGE TORNILLO	2	2				
31	90201–16M01	WASHER, PLATE ARANDELA PLANA	2	2				
32	6DA–44526–00	PLATE PLACA 1	1	1				
33	6DA–44532–00	STOPPER, UPPER MOUNT RETEN	1	1				
34	90185–14M00	NUT, SELF-LOCKING TUERCA AUTOBLOCANTE	2	2				
35	92995–14600	WASHER ARANDELA	2	2				
36	63P–44511–00	COVER, UPPER MOUNT CUBIERTA AMORTIGUADOR SUPERIOR	1	1				
37	90387–14004	COLLAR ESPACIADOR	2	2				

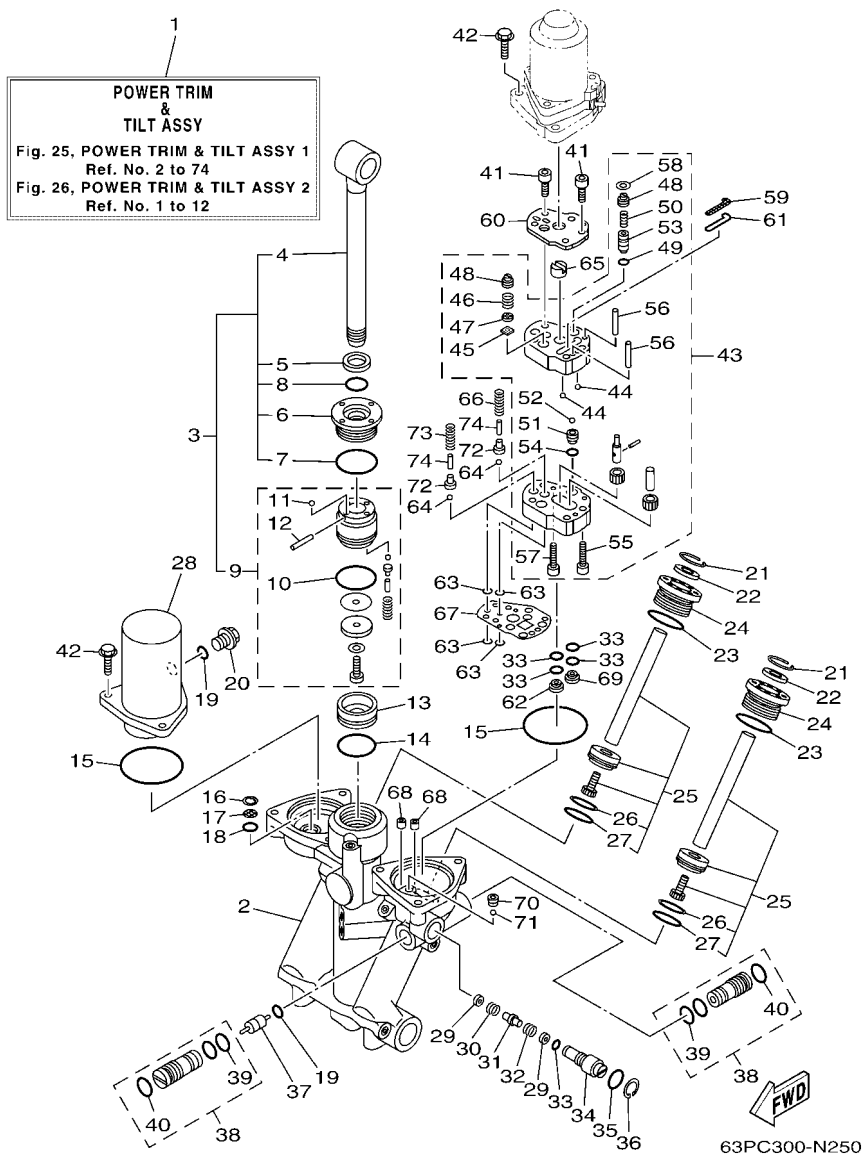

FIG. 25 POWER TRIM & TILT ASSY 1 — COMPONER Y PODER VARILLA 1

REF. NO.	PART NO. CODIGO Nº	DESCRIPTION DESCRIPCION	63PE	64PE				REMARKS OBSERVACIONES
1	63P–43800–13	POWER TRIM & TILT ASSY ELEVADOR HIDRAULICO COMPL.	1	1				
2	63P–4380L–13	HOUSING, TRIM & TILT SUB ASSY CAJA, INCLINACION Y ADRNO	1	1				
3	63P–43810–10	TILT PISTON SUB ASSY ELEVADOR SUB-PISTON COMPL.	1	1				
4	63P–43801–10	.ROD .VALILLA COMPL INCLINACION	1	1				
5	93106–19N50	.OIL SEAL .SELLO ACEITE	1	1				
6	63P–43811–10	.SCREW, CYLINDER END .TORNILLO CILINDRO EXTREMO	1	1				
7	6H1–43861–00	.O-RING .ANILLO EN O 1	1	1				
8	63P–43863–10	.O-RING .ANILLO EN O 3	1	1				
9	63P–4380P–10	.PISTON SUB ASSY .SUB-PISTON COMPL	1	1				
10	6H1–43862–00	..O-RING ..ANILLO EN O 2	1	1				
11	93505–32038	..BALL ..BOLA	1	1				
12	91609–16012	..PIN, SPRING ..PASADOR DE RESORTE	1	1				
13	63P–43814–10	PISTON, FREE PISTON LIBRE	1	1				
14	6H1–43862–00	O-RING ANILLO EN O 2	1	1				
15	93210–68N50	O-RING ANILLO O	2	2				
16	63P–43876–10	RING, SNAP ANILLO	1	1				
17	63P–43816–10	FILTER 1 FIELTRO 1	1	1				
18	93210–11N52	O-RING ANILLO O	1	1				
19	93210–09165	O-RING ANILLO O	2	2				
20	63P–43829–10	PLUG, RESERVOIR TAPON DEPOSITO	1	1				
21	63P–43875–10	RING, SNAP ANILLO	2	2				
22	6H1–43822–10	SEAL, TRIM DUST SELLO DE POLVO	2	2				
23	63P–43862–10	O-RING ANILLO EN O 2	2	2				
24	63P–43821–10	SCREW, TRIM CYLINDER END TORNILLO CILINDURO EXTREMO	2	2				
25	63P–43820–10	TRIM PISTON SUB ASSY ELEVADOR PISTON COMPL.	2	2				
26	62X–43871–00	.RING, BACK UP .ANILLO	1	1				
27	93210–29375	.O-RING .ANILLO O	1	1				

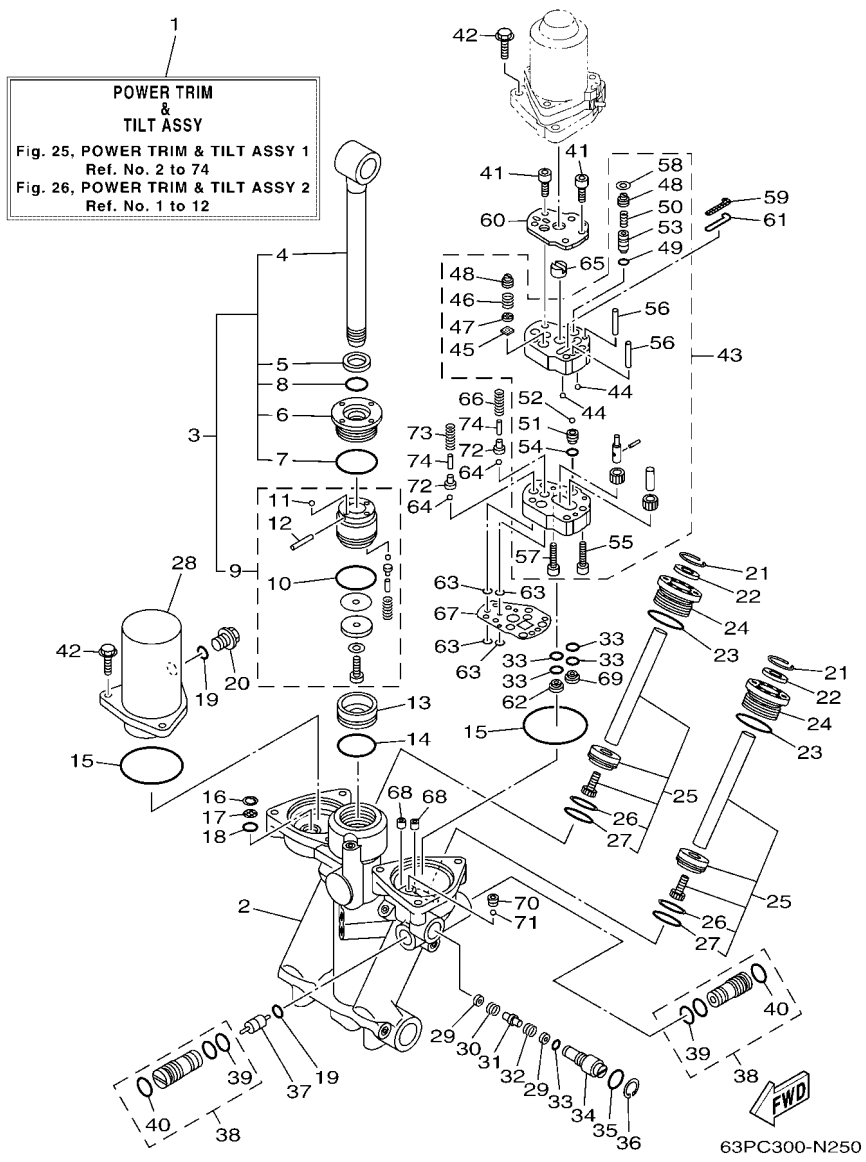

FIG. 25 POWER TRIM & TILT ASSY 1 — COMPONER Y PODER VARILLA 1

REF. NO.	PART NO. CODIGO Nº	DESCRIPTION DESCRIPCION	63PE	64PE				REMARKS OBSERVACIONES
28	63P–43828–10	BODY, RESERVOIR CUERPO DEPOSITO	1	1				
29	63P–43847–10	SEAT, MANUAL VALVE ASIENTO VALVULA MANUAL	2	2				
30	63P–43854–10	SPRING, MANUAL RELEASE RESORTE DESCOPLO MANUAL	1	1				
31	63P–4382A–10	ADAPTOR 1 ADAPTADOR 1	1	1				
32	63P–4384H–10	SPRING RESORTE	1	1				
33	69J–4389J–00	O-RING ANILLO O	5	5				
34	63P–43845–10	SCREW, MANUAL RELEASE TORNILLO DESCOPLO MANUAL	1	1				
35	93210–18397	O-RING ANILLO O	1	1				
36	6H1–43875–00	RING, SNAP ANILLO	1	1				
37	6H1–43841–11	PISTON, SHUTTLE PISTON	1	1				
38	63P–43802–10	VALVE SUB ASSY VALVULA PRINCIPAL COMPL.	2	2				
39	93210–12N52	.O-RING .ANILLO O	1	1				
40	6H1–43866–01	.O-RING .ANILLO EN O 6	1	1				
41	91318–05040	BOLT TORNILLO	4	4				
42	97595–06625	BOLT, WITH WASHER PERNO CON ARANDELA	6	6				
43	63P–43830–10	GEAR PUMP ASSY ENGRANAJE BOMBA COMPL.	1	1				
44	93503–16003	.BALL .ESFERA	2	2				
45	6H1–4384G–11	.SEAL, RELIEF VALVE .ASIENTO	1	1				
46	6H1–43856–10	.SPRING, DOWN RELIEF .RESORTE SEGURIDAD	1	1				
47	6H1–43844–10	.PIN, VALVE SUPPORT .PASADOR VALVULA SOPORTE	1	1				
48	63P–43843–10	.SCREW, VALVE LOCK .TORNILLO	2	2				
49	93210–064A5	.O-RING .ANILLO O	1	1				
50	69J–43855–00	.SPRING, UP RELIEF .RESORTE SEGURIDAD SUPERIOR	1	1				
51	63P–43851–10	.SEAT, RELIEF VALVE .ASIENTO VALVULA DE DESCARGA	1	1				
52	93501–08001	.BALL .BOLA	1	1				
53	6CJ–43844–00	.PIN, VALVE SUPPORT .PASADOR VALVULA SOPORTE	1	1				
54	93210–07N51	.O-RING .ANILLO O	1	1				

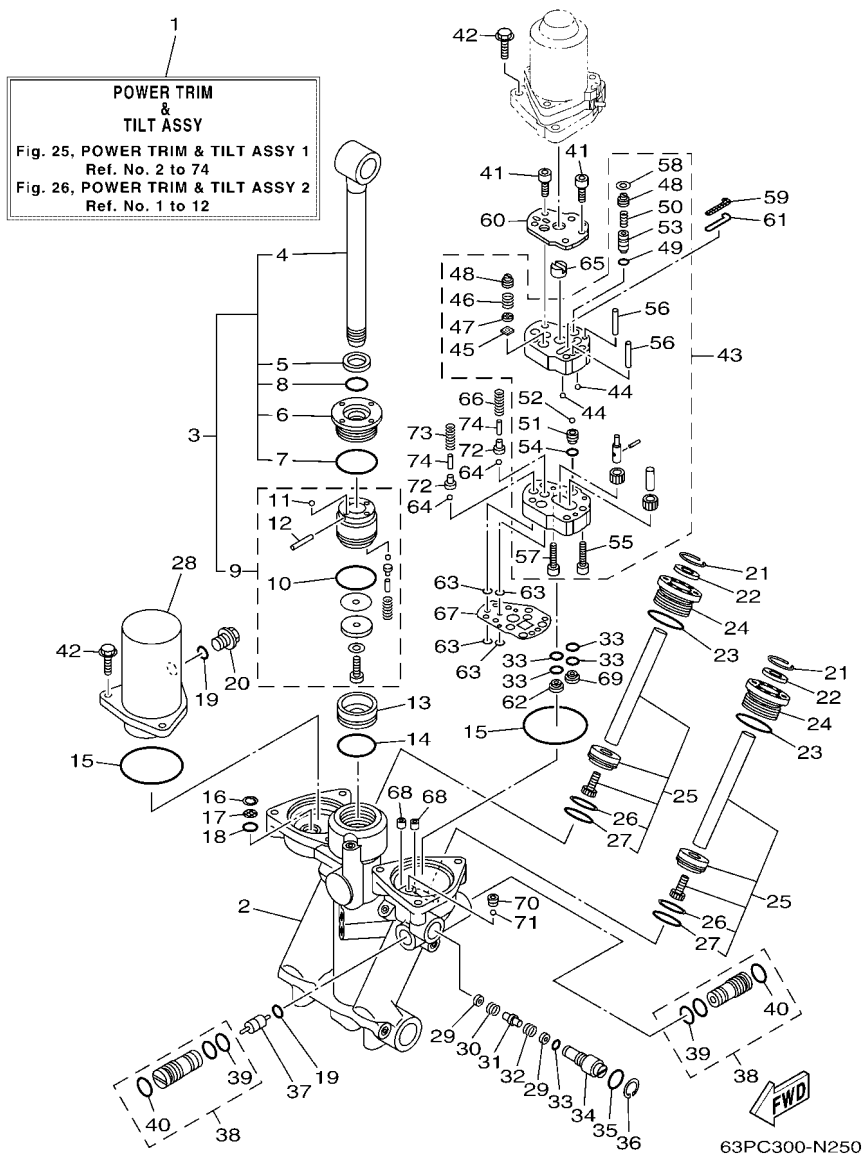

FIG. 25 POWER TRIM & TILT ASSY 1 — COMPONER Y PODER VARILLA 1

REF. NO.	PART NO. CODIGO Nº	DESCRIPTION DESCRIPCION	63PE	64PE				REMARKS OBSERVACIONES
55	91318–04025	.BOLT .TORNILLO	1	1				
56	93604–29184	.PIN, DOWEL .PASADOR DE CLAVIJA	2	2				
57	91318–05025	.BOLT .TORNILLO	1	1				
58	63P–43338–10	.WASHER, WAVE .ARANDELA ONDULADA	1	1				
59	6CJ–43816–00	FILTER 1 FIELTRO 1	1	1				
60	63P–4381J–10	PLATE PLACA	1	1				
61	62Y–43871–00	RING, BACK UP ANILLO	1	1				
62	69J–43899–01	PLATE STOPPER PLACA	1	1				
63	93210–064A5	O-RING ANILLO O	4	4				
64	93501–08001	BALL BOLA	2	2				
65	69J–43831–00	CONNECTOR, SHAFT CONEXION EJE	1	1				
66	63P–4385H–10	SPRING, SEAL RESORTE	1	1				
67	63P–4384G–10	SEAL, RELIEF VALVE ASIENTO	1	1				
68	63P–4388H–10	PLUG TAPON	2	2				
69	63P–43899–10	PLATE STOPPER PLACA	1	1				
70	61A–43878–00	BOLT, SOCKET TORNILLO ENCASTRE	1	1				
71	93505–32038	BALL BOLA	1	1				
72	65W–4386A–00	PIN, ABSORBER VALVE PASADOR VALVULA ABSORBER	2	2				
73	63P–43857–10	SPRING, ABSORBER VALVE RESORTE	1	1				
74	688–4386F–00	PIN, STRAIGHT ANILLO	2	2				

FIG. 26 POWER TRIM & TILT ASSY 2 — COMPONER Y PODER VARILLA 2

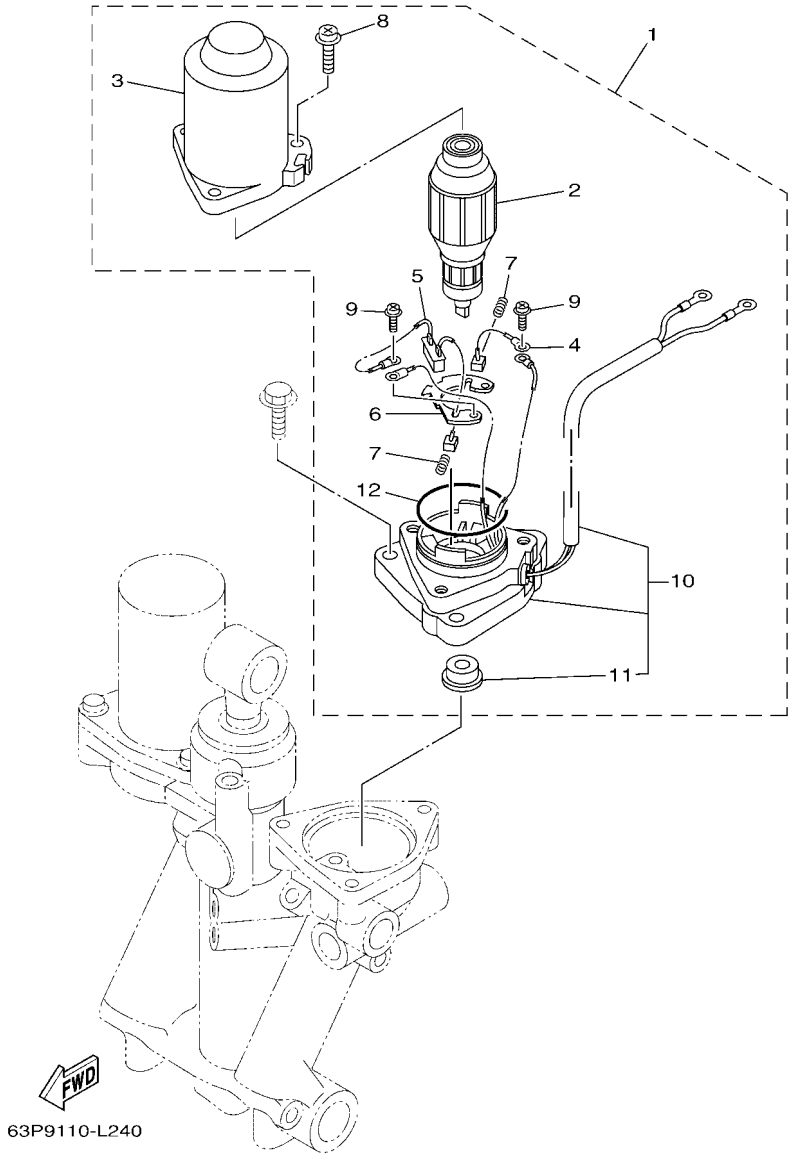

REF. NO.	PART NO. CODIGO Nº	DESCRIPTION DESCRIPCION	63PE	64PE				REMARKS OBSERVACIONES
1	63P–43880–21	MOTOR ASSY MOTOR COMPL.	1	1				
2	6EK–43805–00	.ARMATURE ASSY .INDUCIDO COMPL.	1	1				
3	6EK–43804–11	.STATOR ASSY .ESTATOR COMPL	1	1				
4	6EK–43892–00	.BRUSH 2 .ESCOBILLA 2	1	1				
5	6EK–82181–00	.CIRCUIT BREAKER COMP. .RUPTOR DE CIRCUITO COMPL	1	1				
6	6EK–4380F–00	.PLATE, BRUSH HOLDER .PLACA	1	1				
7	62X–4386K–00	.SPRING, BRUSH .RESORTE, ESCOBILLA	2	2				
8	63P–43879–10	.SCREW, WITH WASHER .TORNILLO CON RONDANA	3	3				
9	97602–04216	.SCREW, PAN HEAD WITH WASHER .TORNILLO CON RONDONA	2	2				
10	63P–43881–21	.FRAME, END .CUADRO EXTERMO	1	1				
11	6EK–43882–00	..OIL SEAL ..SELLO ACEITE	1	1				
12	93210–554A9	.O-RING .ANILLO O	1	1				

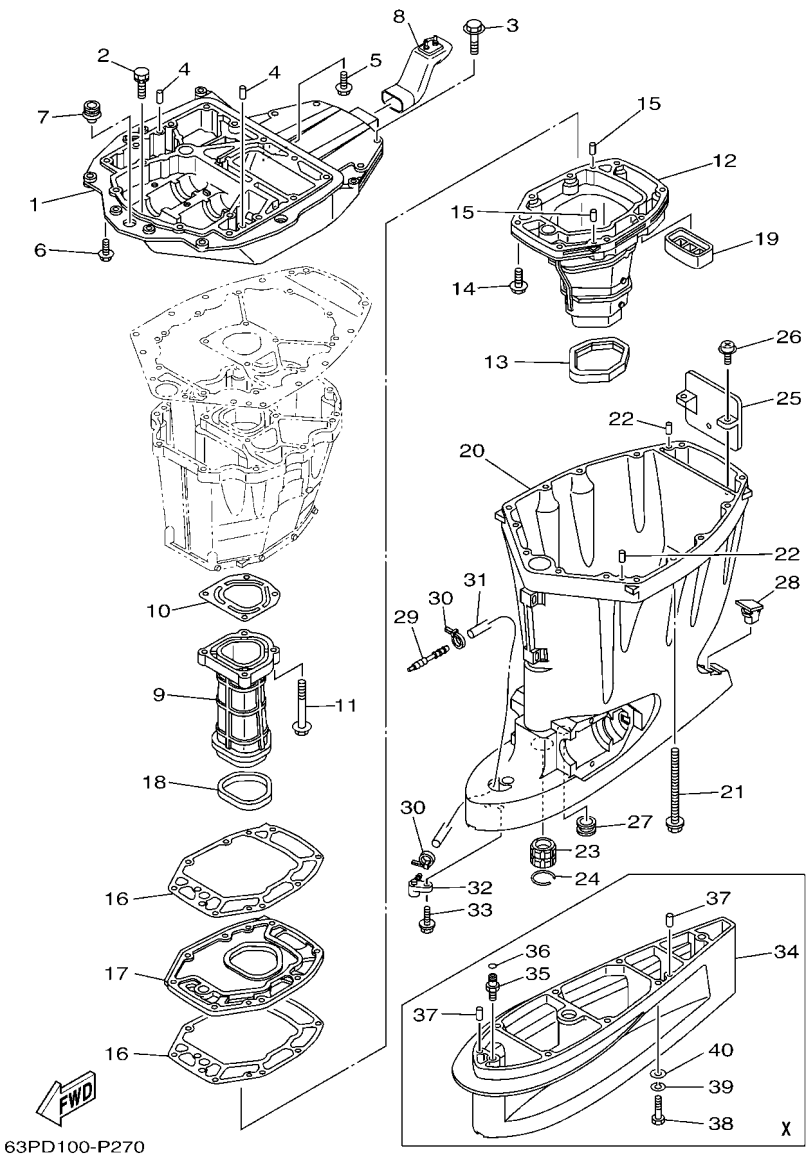

FIG. 27 UPPER CASING — FUNDA SUPERIOR

REF. NO.	PART NO. CODIGO Nº	DESCRIPTION DESCRIPCION	63PE	64PE				REMARKS OBSERVACIONES
1	63P–41137–04–CA	GUIDE, EXHAUST GUIA DE ESCAPE	1	1				
2	90119–08102	BOLT, WITH WASHER TORNILLO CON ARANDELA	2	2				
3	97575–10545	BOLT, WITH WASHER PERNO CON ARANDELA	4	4				
4	93608–16M16	PIN, DOWEL PASADOR DE CLAVIJA	2	2				
5	90119–08M58	BOLT, WITH WASHER TORNILLO CON ARANDELA	3	3				
6	97575–10535	BOLT, WITH WASHER PERNO CON ARANDELA	4	4				
7	6E5–42724–00	GROMMET TAPON	1	1				
8	6DA–42769–00	SEAL, RUBBER SELLO DE GOMA	1	1				
9	63P–41131–01–9S	MANIFOLD, EXT. 1 TUBO MULTIPLE DE ESCAPE	1	1				
10	63P–41133–A0	GASKET, EXHAUST MANIFOLD 1 EMPAQUE ESCAPE MULTIPLE	1	1				
11	97575–08560	BOLT, WITH WASHER PERNO CON ARANDELA	4	4				
12	63P–14711–01–9S	MUFFLER 1 SILENCIADOR 1	1	1				
13	69J–45123–00	GASKET, MUFFLER EMPAQUE SILENCIADOR	1	1				
14	97575–08535	BOLT, WITH WASHER PERNO CON ARANDELA	8	8				
15	93606–19M23	PIN, DOWEL PASADOR DE CLAVIJA	2	2				
16	63P–41134–A1	GASKET, EXHAUST MANIFOLD EMPAQUE	2	2				
17	63P–45181–01–9S	PLATE PLACA	1	1				
18	63P–41138–00	SEAL, EXT. 1 SELLO, ESCAPE 1	1	1				
19	69J–45127–00	SEAL SELLO DE GOMA	1	1				
20	63P–45111–00–8D	CASING, UPPER CAJA SUPERIOR	1	1				
21	90119–10007	BOLT, WITH WASHER TORNILLO CON ARANDELA	8	8				
22	93608–16M16	PIN, DOWEL PASADOR DE CLAVIJA	2	2				
23	6E5–45318–00	BUSHING, DRIVE SHAFT BUJE, EJE DE MANDO	1	1				
24	93420–36M01	CIRCLIP SEGURO	1	1				
25	69J–14624–01	COVER, EXHAUST CUBIERTA ESCAPE	1	1				
26	97980–06216	SCREW, WITH WASHER TORNILLO, CON ARANDELA	2	2				
27	6E5–44366–00	DAMPER, WATER SEAL 2 GOMA DEL SELLO DE AGUA 2	1	1				

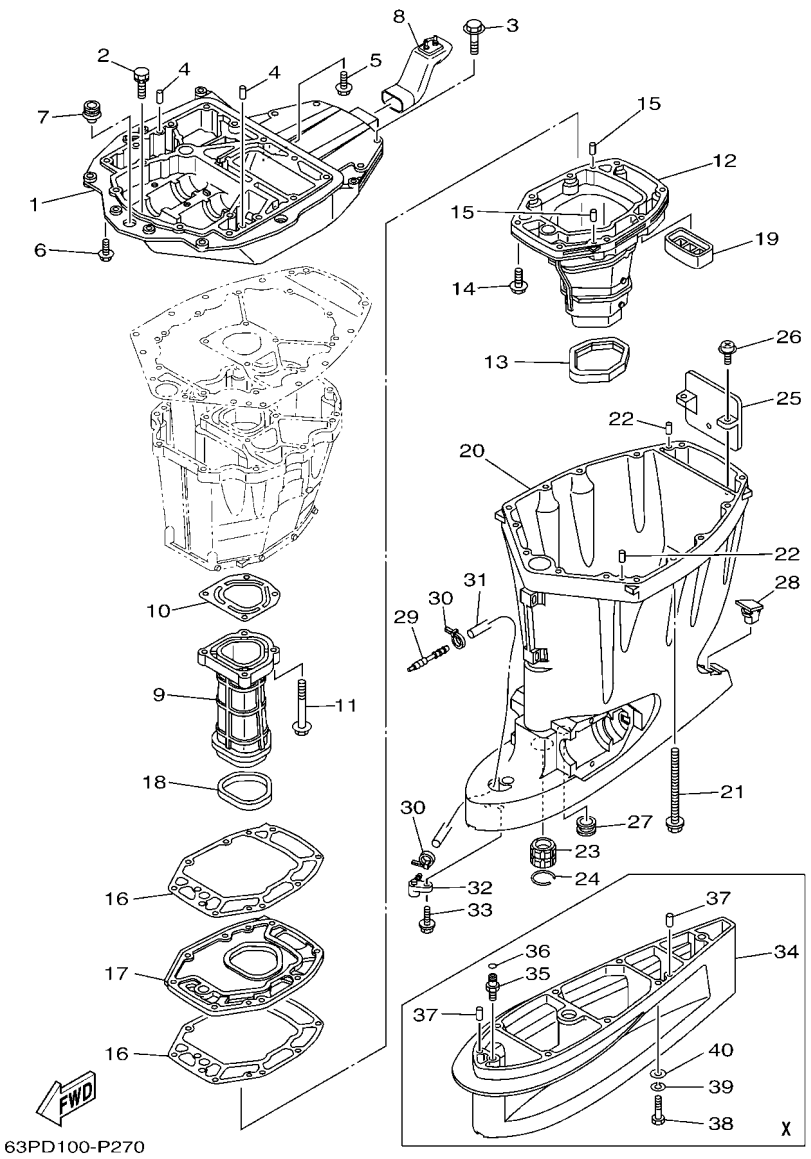

FIG. 27 UPPER CASING — FUNDA SUPERIOR

REF. NO.	PART NO. CODIGO Nº	DESCRIPTION DESCRIPCION	63PE	64PE				REMARKS OBSERVACIONES
28	6C5–45155–00	CAP TAPA	1	1				
29	6E5–83558–00	END, NIPPLE EXTREMO DE NIPLE	1	1				
30	90465–11M10	CLAMP BRIDA	2	2				
31	90445–070F1	HOSE (L950) TUBO (L950)	1	1				
32	63P–45379–00	NIPPLE, HOSE NIPLE DE MANGUERA	1	1				
33	90119–06M18	BOLT, WITH WASHER TORNILLO CON ARANDELA	1	1				
34	63P–45211–00–8D	EXTENSION EXTENSION	1	1				X(25.3") X(25.3")
35	63P–45378–00	NIPPLE, HOSE NIPLE MANGUERA	1	1				X(25.3") X(25.3")
36	93210–07003	O-RING ANILLO O	1	1				X(25.3") X(25.3")
37	93608–16M16	PIN, DOWEL PASADOR DE CLAVIJA	2	2				X(25.3") X(25.3")
38	97095–10045	BOLT PERNO	6	6				X(25.3") X(25.3")
39	92995–10100	WASHER ARANDELA	6	6				X(25.3") X(25.3")
40	92995–10600	WASHER ARANDELA	6	6				X(25.3") X(25.3")

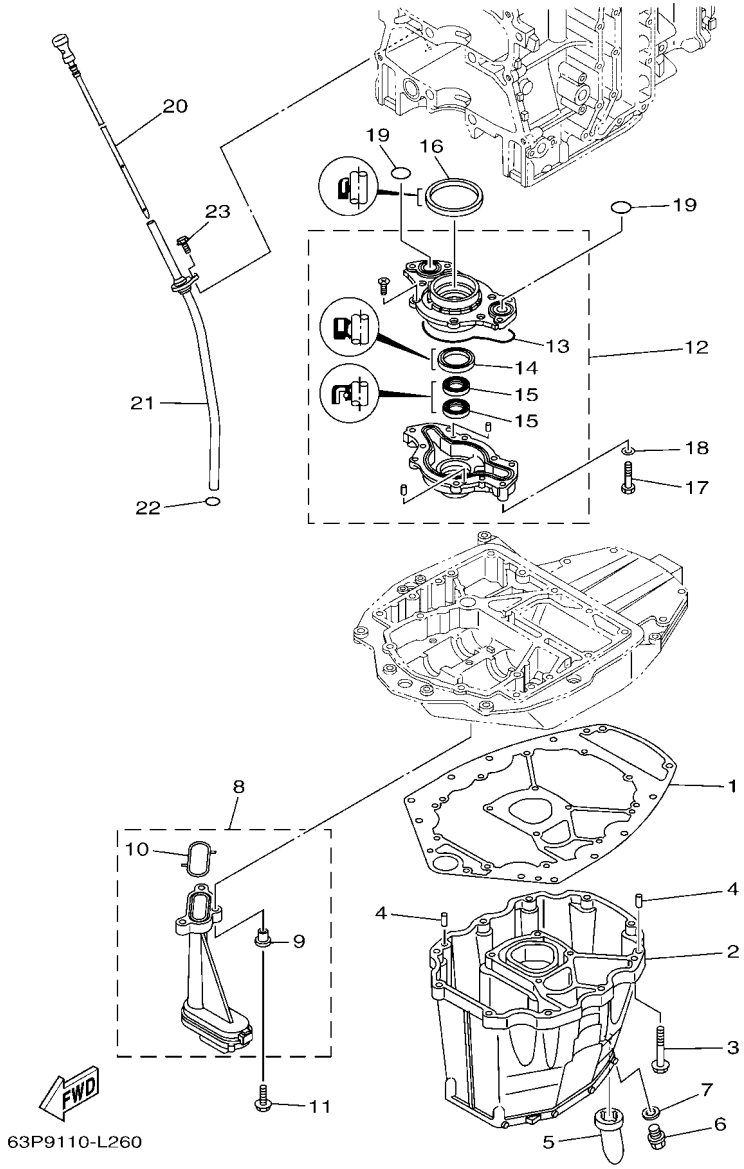

FIG. 28 OIL PAN

OIL PAN

REF. NO.	PART NO. CODIGO Nº	DESCRIPTION DESCRIPCION	63PE	64PE				REMARKS OBSERVACIONES
1	63P–15312–01	GASKET, OIL PAN EMPAQ BANDEJA DE ACEITE	1	1				
2	63P–15311–02–CA	OIL PAN BANDEJA DE ACEITE	1	1				
3	97575–08535	BOLT, WITH WASHER PERNO CON ARANDELA	10	10				
4	93608–16M16	PIN, DOWEL PASADOR DE CLAVIJA	2	2				
5	63P–15316–00	DAMPER 1 AMORTIGUADOR 1	1	1				
6	90340–14M06	PLUG, STRAIGHT SCREW TORNILLO, DE DRENAJE	1	1				
7	90430–14M09	GASKET JUNTA	1	1				
8	63P–13411–00	STRAINER, OIL FILTRO DE ACEITE	1	1				
9	90387–06263	.COLLAR .ESPACIADOR	3	3				
10	63P–13415–00	.SEAL, OIL STRAINER .SELLO COLADOR ACEITE	1	1				
11	95812–06025	BOLT, FLANGE TORNILLO DE REBORDE	3	3				
12	63P–13300–02	OIL PUMP ASSY BOMBA DE ACEITE COMPLETA	1	1				
13	63P–13329–00	.GASKET, PUMP COVER .EMPAQUE TAPA DE BOMBA	1	1				
14	6AW–13119–00	.OIL SEAL .SELLO ACEITE	1	1				
15	69J–13631–00	.OIL SEAL .SELLO ACEITE	2	2				
16	69J–11355–00	SEAL, CYLINDER 1 RETEN ACEITE CILINDRO 1	1	1				
17	97095–06040	BOLT PERNO	4	4				
18	92995–06600	WASHER ARANDELA	4	4				
19	93210–25552	O-RING ANILLO O	2	2				
20	63P–15362–10	PLUG, OIL LEVEL TAPON DEL NIVEL DE ACEITE	1	1				
21	63P–15377–10	GUIDE, INLET GUIA DE ENTRADA	1	1				
22	93210–19MJ3	O-RING ANILLO O	1	1				
23	95895–06016	BOLT, FLANGE TORNILLO DE REBORDE	1	1				

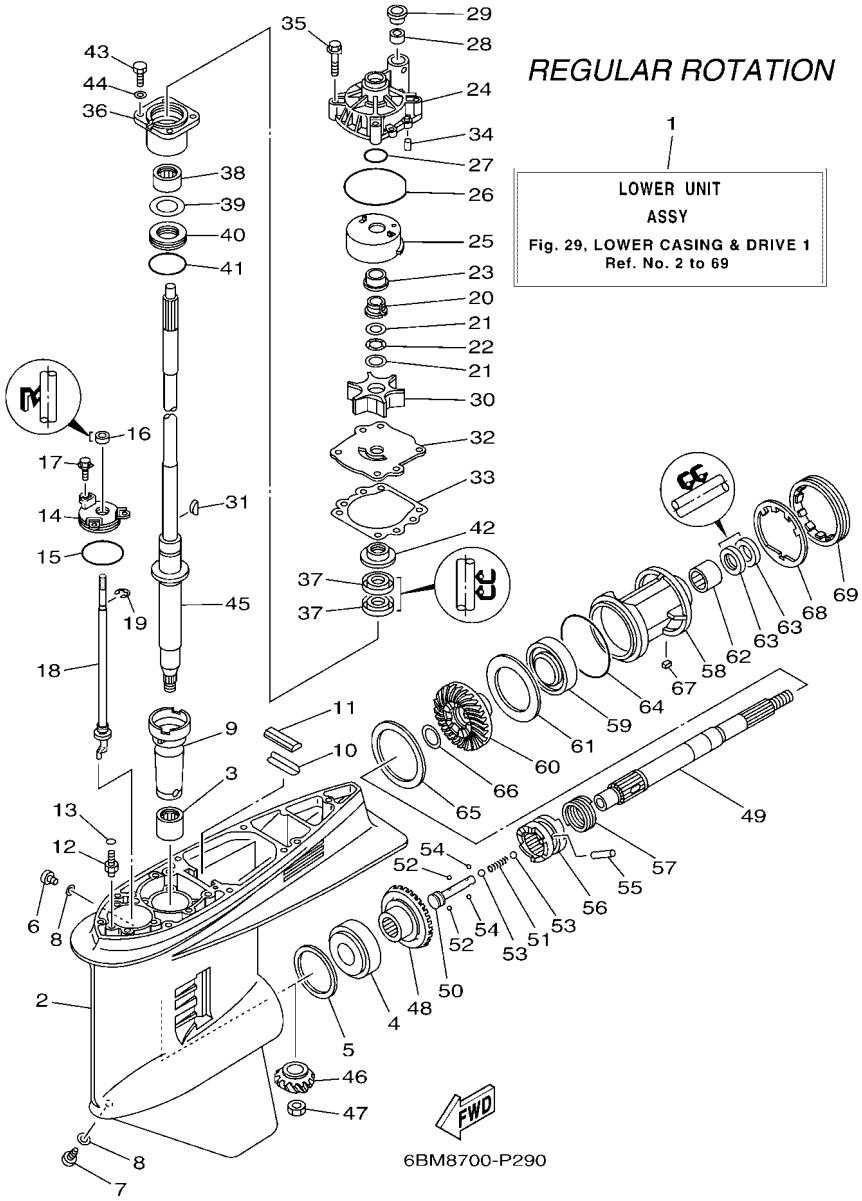

FIG. 29 LOWER CASING & DRIVE 1 — IMPULSOR E INFERIOR 1

REF. NO.	PART NO. CODIGO Nº	DESCRIPTION DESCRIPCION	63PE	64PE				REMARKS OBSERVACIONES
1	63P–45300–04–8D	LOWER UNIT ASSY CONJUNTO UNIDAD INFERIOR	1					L(20.3"),RH L(20.3"),RH
	63P–45300–14–8D	LOWER UNIT ASSY CONJUNTO UNIDAD INFERIOR	1					X(25.3"),RH X(25.3"),RH
2	6J9–45301–07–8D	CASING, LOWER FUNDA INFERIOR COMPLETA	1					
3	93311–928U5	BEARING COJINETE DE RODILLOS	1					
4	93332–000V3	BEARING COJINETE	1					
5	6G5–45567–01	SHIM (T:0.10MM) LAINA (T:0.10MM)	1					UR UR
	6G5–45567–10	SHIM (T:0.12MM) LAINA (T:0.12MM)	1					UR UR
	6G5–45567–20	SHIM (T:0.15MM) LAINA (T:0.15MM)	1					UR UR
	6G5–45567–30	SHIM (T:0.18MM) LAINA (T:0.18MM)	1					UR UR
	6G5–45567–40	SHIM (T:0.30MM) LAINA (T:0.30MM)	1					UR UR
	6G5–45567–50	SHIM (T:0.40MM) LAINA (T:0.40MM)	1					UR UR
	6G5–45567–60	SHIM (T:0.50MM) LAINA (T:0.50MM)	1					UR UR
6	90340–08002	PLUG, STRAIGHT SCREW TORNILLO, DE DRENAJE	1					
7	688–45341–10	PLUG, DRAIN TAPON, DREN	1					
8	90430–08003	GASKET JUNTA	2					
9	6G5–45536–01	SLEEVE, DRIVE SHAFT CAMISA EJE DE MANDO	1					
10	663–45376–00	GUIDE, SEAL DAMPER GUIA DE SELLO GOMA	1					
11	688–45375–00	DAMPER, SEAL GOMA DE SELLO	1					
12	63P–45378–00	NIPPLE, HOSE NIPLE MANGUERA	1					
13	93210–07003	O-RING ANILLO O	1					
14	6E5–45321–00	PLATE PLACA	1					
15	93210–58144	O-RING ANILLO O	1					
16	93106–09014	OIL SEAL SELLO ACEITE	1					
17	90119–06M10	BOLT, WITH WASHER TORNILLO CON ARANDELA	3					
18	63P–44150–01	SHIFT CAM ASSY CONJUNTO EJE LEVA COMPL.	1					L(20.3"),RH L(20.3"),RH
	63P–44150–11	SHIFT CAM ASSY CONJUNTO EJE LEVA COMPL.	1					X(25.3"),RH X(25.3"),RH
19	99001–08600	CIRCLIP PRESILLA REDONDA	1					

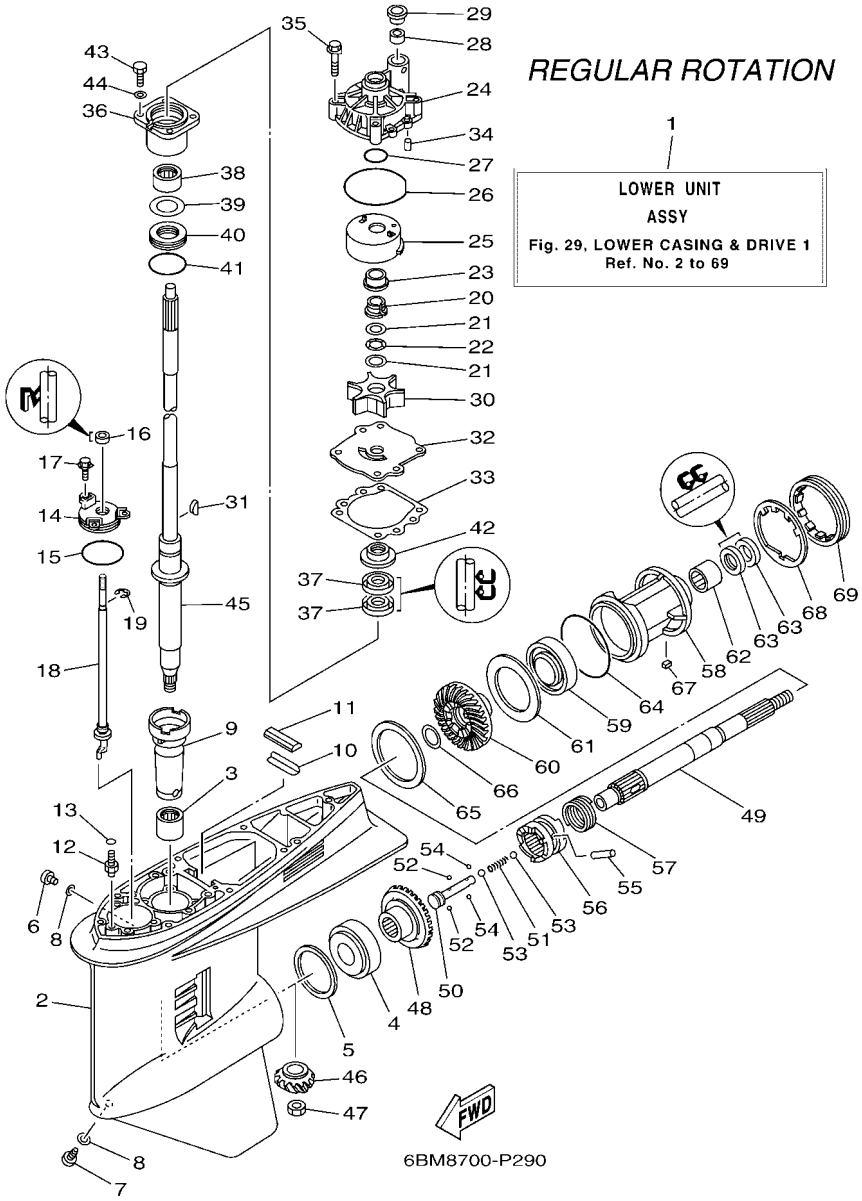

FIG. 29 LOWER CASING & DRIVE 1 — IMPULSOR E INFERIOR 1

REF. NO.	PART NO. CODIGO Nº	DESCRIPTION DESCRIPCION	63PE	64PE				REMARKS OBSERVACIONES
20	61A–45538–00	SPACER 1 ESPACIADOR 1	1					
21	90201–22M01	WASHER, PLATE ARANDELA PLANA	2					
22	90206–22M19	WASHER, WAVE ARANDELA ONDULADA	1					
23	61A–45527–00	COLLAR, DRIVE SHAFT COLLAR EJE FLECHA DE PROPULSIO	1					
24	61A–44311–01	HOUSING, WATER PUMP CAJA BOMBA DE AGUA	1					
25	61A–44322–02	INSERT, CARTRIDGE CARTUCHO	1					
26	93210–86M38	O-RING ANILLO O	1					
27	93210–37160	O-RING ANILLO O	1					
28	6E5–44365–00	DAMPER, WATER SEAL 1 HULE DE SELLO DE AGUA 1	1					
29	6E5–44312–00	COVER, WATER PUMP HOUSING CUBIERTA CAJA BOMBA DE AGUA	1					
30	6E5–44352–01	IMPELLER IMPULSOR	1					
31	90280–04M05	KEY, WOODRUFF CUNA WOODRUFF	1					
32	6G5–44323–01	OUTER PLATE, CARTRIDGE PLACA EXTERIOR DEL CARTUCHO	1					
33	6E5–44315–A0	GASKET, WATER PUMP EMPAQUE	1					
34	93606–12019	PIN, DOWEL PASADOR DE CLAVIJA	2					
35	90119–08M14	BOLT, WITH WASHER TORNILLO CON ARANDELA	4					
36	6E5–45331–00–9S	HOUSING, BEARING CAJA DE COJINETE	1					
37	93101–28M16	OIL SEAL SELLO ACEITE	2					
38	93317–330U2	BEARING COJINETE	1					
39	6E5–45587–01	SHIM (T:0.10MM) LAINA (T:0.10MM)	1					UR UR
	6E5–45587–10	SHIM (T:0.12MM) LAINA (T:0.12MM)	1					UR UR
	6E5–45587–20	SHIM (T:0.15MM) LAINA (T:0.15MM)	1					UR UR
	6E5–45587–30	SHIM (T:0.18MM) LAINA (T:0.18MM)	1					UR UR
	6E5–45587–40	SHIM (T:0.30MM) LAINA (T:0.30MM)	1					UR UR
	6E5–45587–50	SHIM (T:0.40MM) LAINA (T:0.40MM)	1					UR UR
	6E5–45587–60	SHIM (T:0.50MM) LAINA (T:0.50MM)	1					UR UR
40	93341–930V2	BEARING COJINETES CON RODAMIENTOS	1					

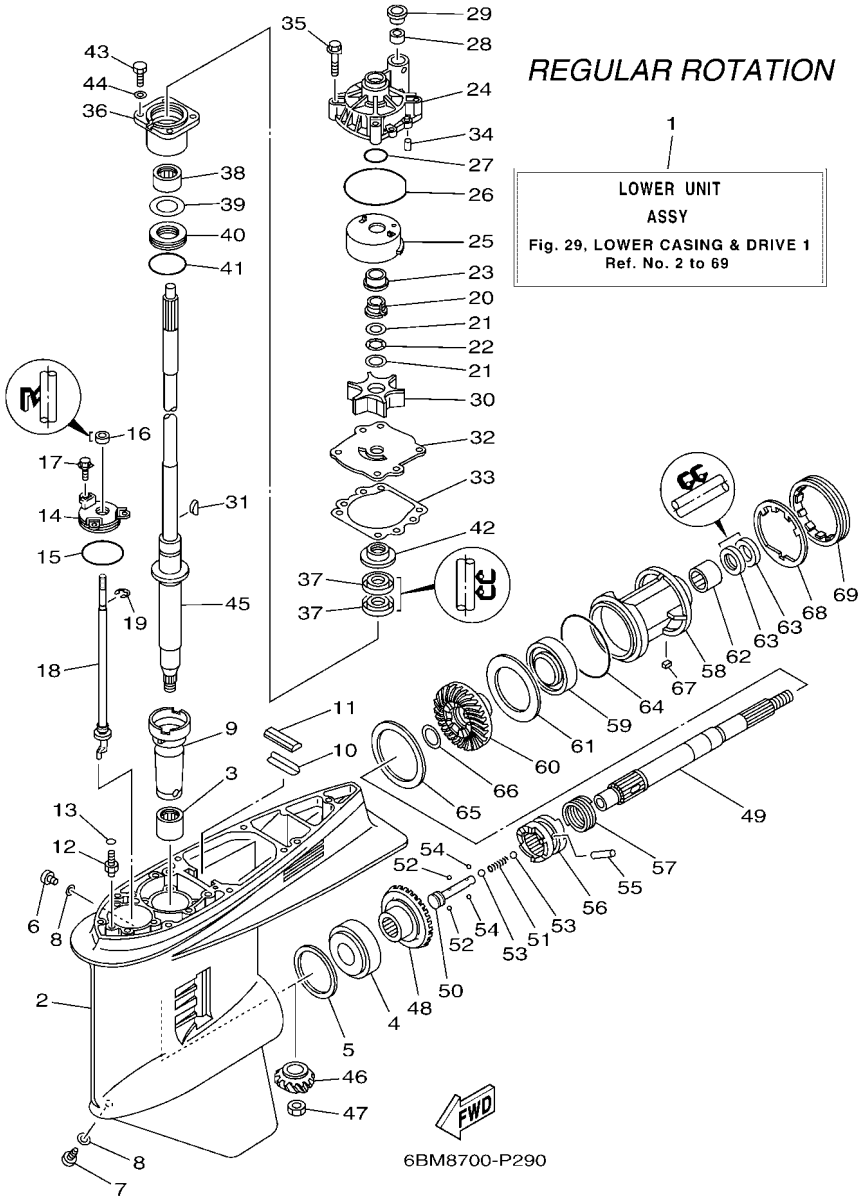

FIG. 29 LOWER CASING & DRIVE 1 — IMPULSOR E INFERIOR 1

REF. NO.	PART NO. CODIGO Nº	DESCRIPTION DESCRIPCION	63PE	64PE				REMARKS OBSERVACIONES
41	93210–55M14	O-RING ANILLO O	1					
42	6E5–45344–00	COVER, OIL SEAL CUBIERTA SELLO ACEITE	1					
43	97095–08025	BOLT PERNO	4					
44	92995–08600	WASHER ARANDELA	4					
45	63P–45501–01	DRIVE SHAFT COMP. EJE DE MANDO COMPL.	1					L(20.3") L(20.3")
	63P–45501–11	DRIVE SHAFT COMP. EJE DE MANDO COMPL.	1					X(25.3") X(25.3")
46	63P–45551–00	PINION (14T) PINON (14T)	1					
47	90170–16M01	NUT TUERCA	1					
48	6EH–45560–00	GEAR 1 (28T) ENGRANAJE 1 (28T)	1					
49	6J9–45611–01	SHAFT, PROPELLER EJE PROPUSOR	1					
50	6E5–45634–02	SLIDE, SHIFT DESLIZADOR, CAMBIO	1					
51	90501–16M37	SPRING, COMPRESSION RESORTE DE COMPRESION	1					
52	93507–32009	BALL ESFERA	2					
53	93511–32017	BALL ESFERA	2					
54	93503–16003	BALL ESFERA	2					
55	90250–08M07	PIN, STRAIGHT PASADOR CILINDRICO	1					
56	6DA–45631–00	CLUTCH, DOG EMBRAGUE DE GARRA	1					
57	6E5–45633–01	RING, CROSS PIN ANILLO DE PASADOR	1					
58	6J9–45332–00–CA	HOUSING, BEARING CAJA BALERO 2	1					
59	93306–209U0	BEARING COJINETE	1					
60	6EH–45571–00	GEAR 2 (28T) ENGRANAJE 2 (28T)	1					
61	6G5–45576–10	WASHER, THRUST 2 ARANDELA DE EMPUJE AXIAL 2	1					
62	93315–43061	BEARING COJINETE DE RODILLOS	1					
63	93101–30M17	OIL SEAL SELLO ACEITE	2					
64	93210–97M55	O-RING ANILLO O	1					
65	6G5–45577–02	SHIM (T:0.10MM) LAINA (T:0.10MM)	1					UR UR
	6G5–45577–10	SHIM (T:0.12MM) LAINA (T:0.12MM)	1					UR UR

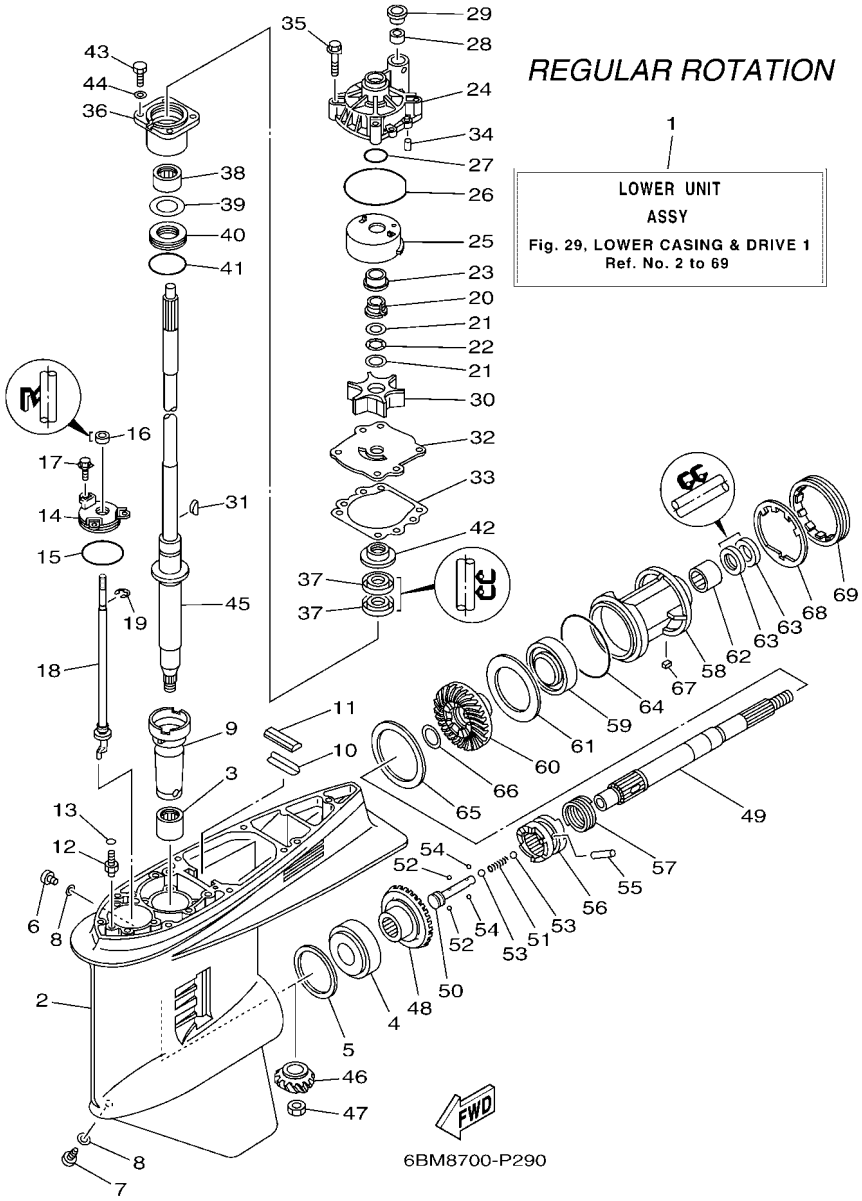

FIG. 29 LOWER CASING & DRIVE 1 — IMPULSOR E INFERIOR 1

REF. NO.	PART NO. CODIGO Nº	DESCRIPTION DESCRIPCION	63PE	64PE				REMARKS OBSERVACIONES
65	6G5–45577–20	SHIM (T:0.15MM) LAINA (T:0.15MM)	1					UR UR
	6G5–45577–30	SHIM (T:0.18MM) LAINA (T:0.18MM)	1					UR UR
	6G5–45577–40	SHIM (T:0.30MM) LAINA (T:0.30MM)	1					UR UR
	6G5–45577–50	SHIM (T:0.40MM) LAINA (T:0.40MM)	1					UR UR
	6G5–45577–60	SHIM (T:0.50MM) LAINA (T:0.50MM)	1					UR UR
66	90201–30M92	WASHER, PLATE ARANDELA PLANA	1					
67	90282–04M00	KEY, STRAIGHT CHAVETA, RECTA	1					
68	6G5–45383–01	WASHER, CLAW ARANDELA DE UNA	1					
69	6G5–45384–02	NUT TUERCA	1					

FIG. 30 LOWER CASING & DRIVE 2 — IMPULSOR E INFERIOR 2

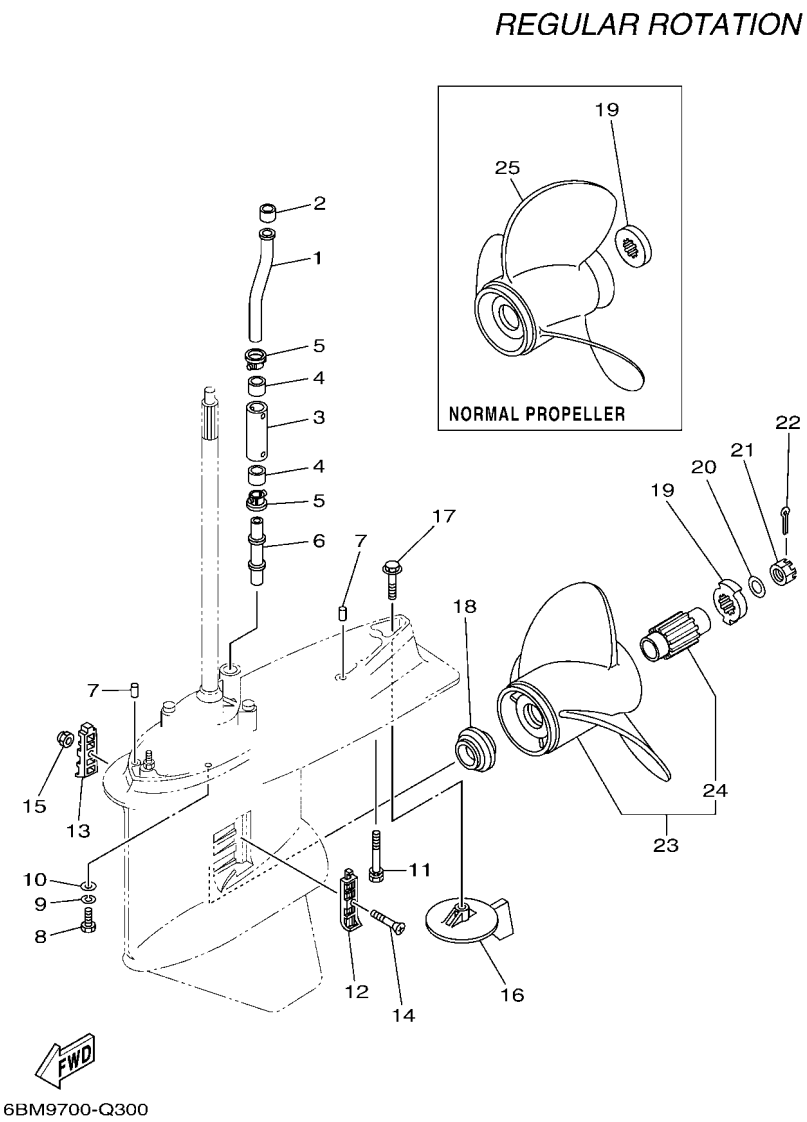

REF. NO.	PART NO. CODIGO Nº	DESCRIPTION DESCRIPCION	63PE	64PE				REMARKS OBSERVACIONES
1	63P–44361–00	TUBE, WATER 1 TUBO DE AGUA 1	1					
2	6E5–44365–00	DAMPER, WATER SEAL 1 HULE DE SELLO DE AGUA 1	1					
3	63P–44362–00	TUBE, WATER 2 TUBO DE AGUA 2	1					X(25.3") X(25.3")
4	6E5–44365–00	DAMPER, WATER SEAL 1 HULE DE SELLO DE AGUA 1	2					X(25.3") X(25.3")
5	6E5–44312–00	COVER, WATER PUMP HOUSING CUBIERTA CAJA BOMBA DE AGUA	2					X(25.3") X(25.3")
6	63P–44363–00	TUBE, WATER 3 TUBO DE AGUA 3	1					X(25.3") X(25.3")
7	93608–16M16	PIN, DOWEL PASADOR DE CLAVIJA	2					
8	97095–10045	BOLT PERNO	6					
9	92995–10100	WASHER ARANDELA	6					
10	92995–10600	WASHER ARANDELA	6					
11	90119–10MA2	BOLT, WITH WASHER TORNILLO CON ARANDELA	1					L(20.3") L(20.3")
	90119–10008	BOLT, WITH WASHER TORNILLO CON ARANDELA	1					X(25.3") X(25.3")
12	6J9–45214–00	COVER, WATER INLET 1 CUBIERTA ENTRADA AGUA 1	1					
13	6J9–45215–00	COVER, WATER INLET 2 CUBIERTA ENTRADA AGUA 2	1					
14	90152–05M08	SCREW, COUNTERSUNK TORNILLO EMBUTIDO	1					
15	90185–05002	NUT, NYLON TUERCA AUTOBLOCANTE	1					
16	6J9–45371–01	TAB-TRIM QUILLA ESTABILIZADOR	1					
17	90105–10M00	BOLT, FLANGE TORNILLO	1					
18	63P–45987–00	SPACER 1 ESPACIADOR 1	1					
19	6CE–45997–00	SPACER 2 ESPACIADOR 2	1					FOR SDS PROP. FOR SDS PROP.
	688–45997–01	SPACER 2 ESPACIADOR 2	1					FOR NORMAL PROP. FOR NORMAL PROP.
20	92990–18200	WASHER ARANDELA PLANA	1					
21	90171–18M04	NUT, CASTLE TUERCA ENTALLADA	1					
22	91490–40030	PIN. COTTER CHAVETA	1					
23	68F–45970–10	PROPELLER (3X14-1/2"X15"-M) PROPELA (3X14-1/2"X15"-M)	1					UR SDS PROP. UR SDS PROP.
	68F–45972–10	PROPELLER (3X14-1/4"X17"-M) PROPELA (3X14-1/4"X17"-M)	1					UR SDS PROP. UR SDS PROP.
	68F–45978–10	PROPELLER (3X14-1/4"X18"-M) PROPELA (3X14-1/4"X18"-M)	1					UR SDS PROP. UR SDS PROP.

FIG. 30 LOWER CASING & DRIVE 2 — IMPULSOR E INFERIOR 2

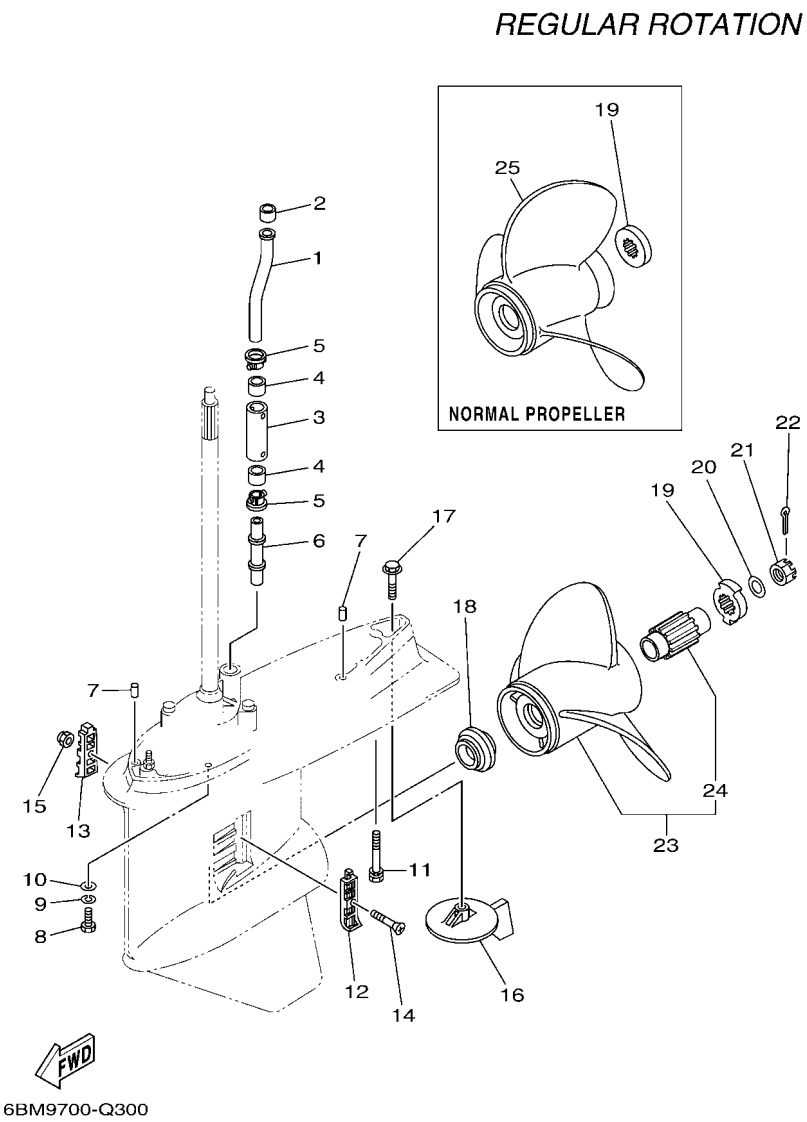

REF. NO.	PART NO. CODIGO Nº	DESCRIPTION DESCRIPCION	63PE	64PE				REMARKS OBSERVACIONES
23	68F–45974–10	PROPELLER (3X13-3/4"X19"-M) PROPELA (3X13-3/4"X19"-M)	1					UR SDS PROP. UR SDS PROP.
	68F–45976–10	PROPELLER (3X13-3/4"X21"-M) PROPELA (3X13-3/4"X21"-M)	1					UR SDS PROP. UR SDS PROP.
24	6CE–45C81–00	.DAMPER RUBBER, PROPELLER 1 .AMORTIGUADOR PROPELA 1	1					
25	6G5–45941–00	PROPELLER (3X15-1/4"X15"-M) PROPELA (3X15-1/4"X15"-M)	1					UR NORMAL PROP. UR NORMAL PROP.
	6G5–45943–01	PROPELLER (3X13-3/4"X21"-M) PROPELA (3X13-3/4"X21"-M)	1					UR NORMAL PROP. UR NORMAL PROP.
	6G5–45945–01	PROPELLER (3X14"X19"-M) PROPELA (3X14"X19"-M)	1					UR NORMAL PROP. UR NORMAL PROP.
	6G5–45947–01	PROPELLER (3X14-1/2"X17"-M) PROPELA (3X14-1/2"X17"-M)	1					UR NORMAL PROP. UR NORMAL PROP.
	6G5–45949–00	PROPELLER (3X13-1/2"X23"-M) PROPELA (3X13-1/2"X23"-M)	1					UR NORMAL PROP. UR NORMAL PROP.
	6G5–45930–00	PROPELLER (3X13-3/8"X25"-M) PROPELA (3X13-3/8"X25"-M)	1					UR NORMAL PROP. UR NORMAL PROP.
	6G5–45932–00	PROPELLER (3X15-3/4"X13"-M) PROPELA (3X15-3/4"X13"-M)	1					UR NORMAL PROP. UR NORMAL PROP.
	6G5–45970–02	PROPELLER (3X15-1/4"X15"-M) PROPELA (3X15-1/4"X15"-M)	1					UR NORMAL PROP. UR NORMAL PROP.
	6G5–45972–02	PROPELLER (3X13-3/4"X21"-M) PROPELA (3X13-3/4"X21"-M)	1					UR NORMAL PROP. UR NORMAL PROP.
	6G5–45974–03	PROPELLER (3X13-3/4"X19"-M2) PROPELA (3X13-3/4"X19"-M2)	1					UR NORMAL PROP. UR NORMAL PROP.
	6G5–45976–01	PROPELLER (3X13-3/8"X23"-M) PROPELA (3X13-3/8"X23"-M)	1					UR NORMAL PROP. UR NORMAL PROP.
	6G5–45978–03	PROPELLER (3X13-3/4"X17"-M2) PROPELA (3X13-3/4"X17"-M2)	1					UR NORMAL PROP. UR NORMAL PROP.
	6R4–45970–A1	PROPELLER (3X15-1/4"X19"-M) PROPELA (3X15-1/4"X19"-M)	1					UR NORMAL PROP. UR NORMAL PROP.
	6R4–45972–A0	PROPELLER (3X14-7/8"X21"-M) PROPELA (3X14-7/8"X21"-M)	1					UR NORMAL PROP. UR NORMAL PROP.
	6R4–45974–A0	PROPELLER (3X14-1/2"X23"-M) PROPELA (3X14-1/2"X23"-M)	1					UR NORMAL PROP. UR NORMAL PROP.
	6R4–45976–A0	PROPELLER (3X14-1/2"X15"-M) PROPELA (3X14-1/2"X15"-M)	1					UR NORMAL PROP. UR NORMAL PROP.
	6R4–45978–A0	PROPELLER (3X15-1/4"X17"-M) PROPELA (3X15-1/4"X17"-M)	1					UR NORMAL PROP. UR NORMAL PROP.
	66K–45970–B0	PROPELLER (3X14-1/2"X27"-M1) PROPELA (3X14-1/2"X27"-M1)	1					UR NORMAL PROP. UR NORMAL PROP.
	66K–45972–B0	PROPELLER (3X14-1/2"X25"-M2) PROPELA (3X14-1/2"X25"-M2)	1					UR NORMAL PROP. UR NORMAL PROP.
	66K–45974–B0	PROPELLER (3X14-1/2"X23"-M2) PROPELA (3X14-1/2"X23"-M2)	1					UR NORMAL PROP. UR NORMAL PROP.
	6J9–45976–10	PROPELLER (3X14-1/2"X21"-M1) PROPELA (3X14-1/2"X21"-M1)	1					UR NORMAL PROP. UR NORMAL PROP.

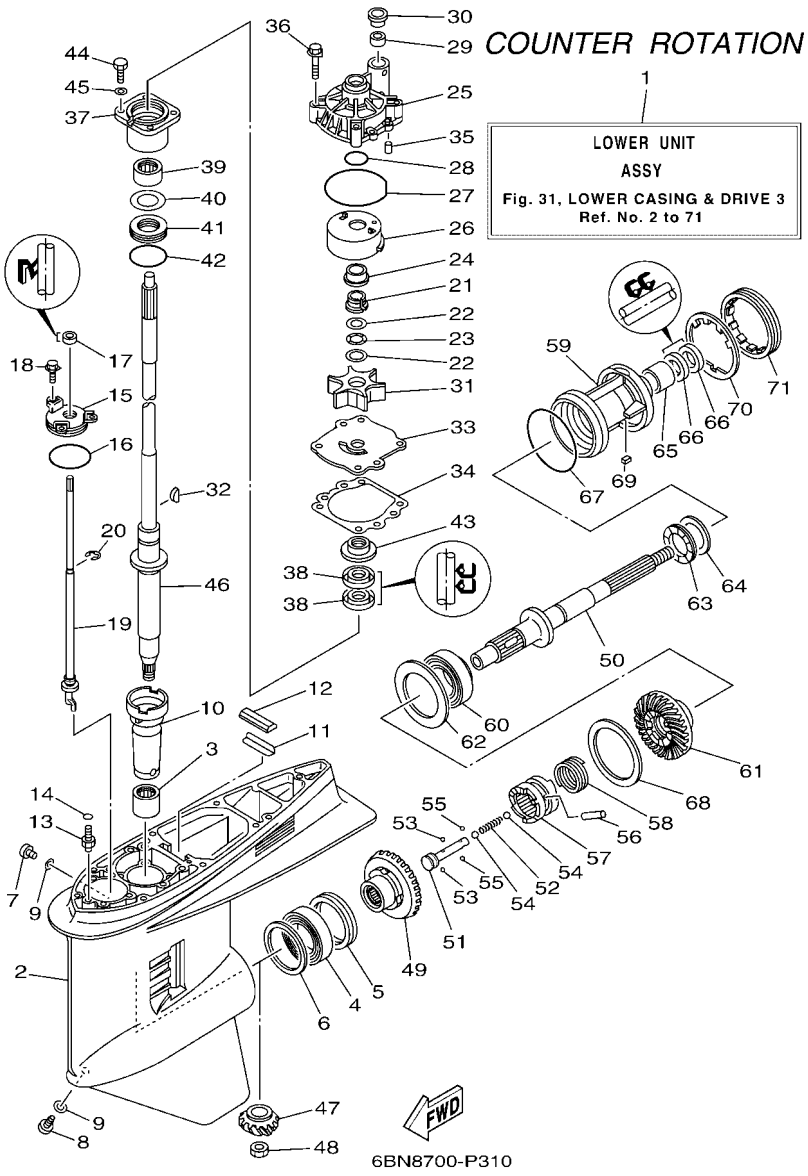

FIG. 31 LOWER CASING & DRIVE 3 — IMPULSOR E INFERIOR 3

REF. NO.	PART NO. CODIGO Nº	DESCRIPTION DESCRIPCION	63PE	64PE				REMARKS OBSERVACIONES
1	64P–45300–13–8D	LOWER UNIT ASSY CONJUNTO UNIDAD INFERIOR		1				X(25.3"),LH X(25.3"),LH
2	6J9–45301–07–8D	CASING, LOWER FUNDA INFERIOR COMPLETA		1				
3	93311–928U5	BEARING COJINETE DE RODILLOS		1				
4	93390–000U2	BEARING COJINETE DE RODILLOS		1				
5	93341–465U4	BEARING COJINETES CON RODAMIENTOS		1				
6	6G5–45567–01	SHIM (T:0.10MM) LAINA (T:0.10MM)		1				UR UR
	6G5–45567–10	SHIM (T:0.12MM) LAINA (T:0.12MM)		1				UR UR
	6G5–45567–20	SHIM (T:0.15MM) LAINA (T:0.15MM)		1				UR UR
	6G5–45567–30	SHIM (T:0.18MM) LAINA (T:0.18MM)		1				UR UR
	6G5–45567–40	SHIM (T:0.30MM) LAINA (T:0.30MM)		1				UR UR
	6G5–45567–50	SHIM (T:0.40MM) LAINA (T:0.40MM)		1				UR UR
	6G5–45567–60	SHIM (T:0.50MM) LAINA (T:0.50MM)		1				UR UR
7	90340–08002	PLUG, STRAIGHT SCREW TORNILLO, DE DRENAJE		1				
8	688–45341–10	PLUG, DRAIN TAPON, DREN		1				
9	90430–08003	GASKET JUNTA		2				
10	6G5–45536–01	SLEEVE, DRIVE SHAFT CAMISA EJE DE MANDO		1				
11	663–45376–00	GUIDE, SEAL DAMPER GUIA DE SELLO GOMA		1				
12	688–45375–00	DAMPER, SEAL GOMA DE SELLO		1				
13	63P–45378–00	NIPPLE, HOSE NIPLE MANGUERA		1				
14	93210–07003	O-RING ANILLO O		1				
15	6E5–45321–00	PLATE PLACA		1				
16	93210–58144	O-RING ANILLO O		1				
17	93106–09014	OIL SEAL SELLO ACEITE		1				
18	90119–06M10	BOLT, WITH WASHER TORNILLO CON ARANDELA		3				
19	64P–44150–11	SHIFT CAM ASSY CONJUNTO EJE LEVA COMPL.		1				X(25.3"),LH X(25.3"),LH
20	99001–08600	CIRCLIP PRESILLA REDONDA		1				
21	61A–45538–00	SPACER 1 ESPACIADOR 1		1				

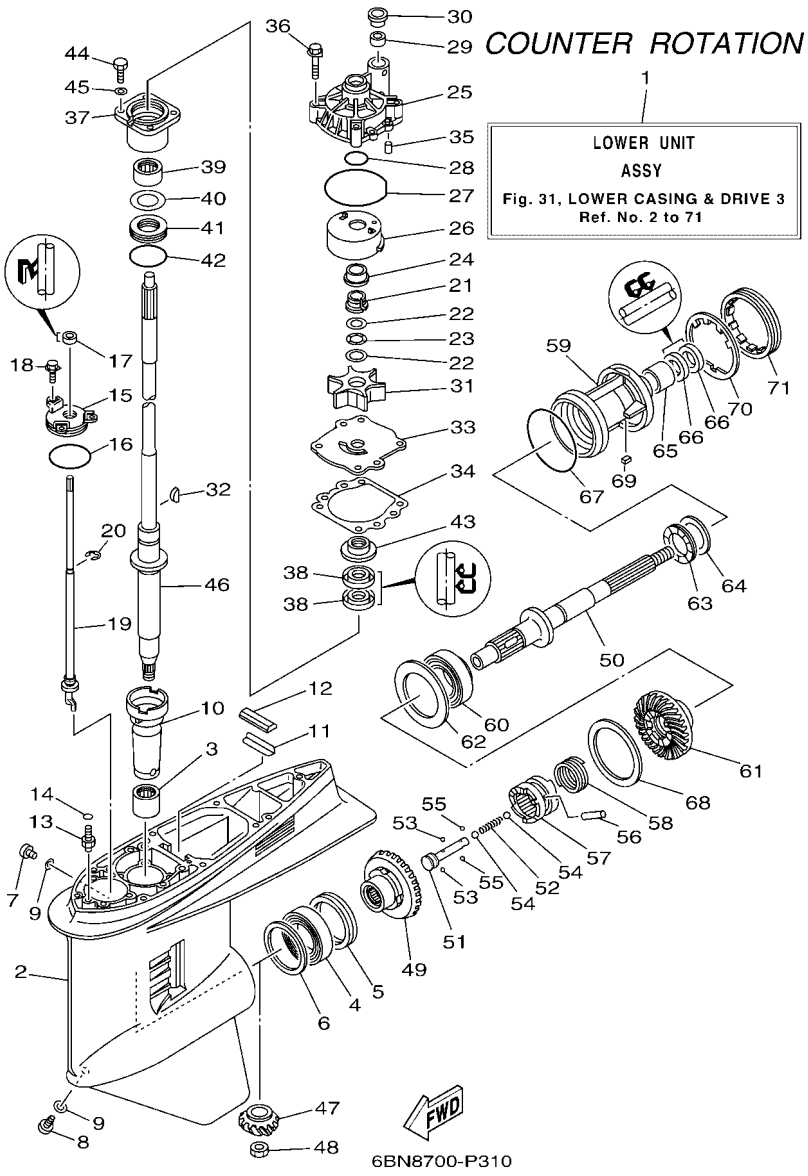

FIG. 31 LOWER CASING & DRIVE 3 — IMPULSOR E INFERIOR 3

REF. NO.	PART NO. CODIGO Nº	DESCRIPTION DESCRIPCION	63PE	64PE				REMARKS OBSERVACIONES
22	90201–22M01	WASHER, PLATE ARANDELA PLANA		2				
23	90206–22M19	WASHER, WAVE ARANDELA ONDULADA		1				
24	61A–45527–00	COLLAR, DRIVE SHAFT COLLAR EJE FLECHA DE PROPULSIO		1				
25	61A–44311–01	HOUSING, WATER PUMP CAJA BOMBA DE AGUA		1				
26	61A–44322–02	INSERT, CARTRIDGE CARTUCHO		1				
27	93210–86M38	O-RING ANILLO O		1				
28	93210–37160	O-RING ANILLO O		1				
29	6E5–44365–00	DAMPER, WATER SEAL 1 HULE DE SELLO DE AGUA 1		1				
30	6E5–44312–00	COVER, WATER PUMP HOUSING CUBIERTA CAJA BOMBA DE AGUA		1				
31	6E5–44352–01	IMPELLER IMPULSOR		1				
32	90280–04M05	KEY, WOODRUFF CUNA WOODRUFF		1				
33	6G5–44323–01	OUTER PLATE, CARTRIDGE PLACA EXTERIOR DEL CARTUCHO		1				
34	6E5–44315–A0	GASKET, WATER PUMP EMPAQUE		1				
35	93606–12019	PIN, DOWEL PASADOR DE CLAVIJA		2				
36	90119–08M14	BOLT, WITH WASHER TORNILLO CON ARANDELA		4				
37	6E5–45331–00–9S	HOUSING, BEARING CAJA DE COJINETE		1				
38	93101–28M16	OIL SEAL SELLO ACEITE		2				
39	93317–330U2	BEARING COJINETE		1				
40	6E5–45587–01	SHIM (T:0.10MM) LAINA (T:0.10MM)		1				UR UR
	6E5–45587–10	SHIM (T:0.12MM) LAINA (T:0.12MM)		1				UR UR
	6E5–45587–20	SHIM (T:0.15MM) LAINA (T:0.15MM)		1				UR UR
	6E5–45587–30	SHIM (T:0.18MM) LAINA (T:0.18MM)		1				UR UR
	6E5–45587–40	SHIM (T:0.30MM) LAINA (T:0.30MM)		1				UR UR
	6E5–45587–50	SHIM (T:0.40MM) LAINA (T:0.40MM)		1				UR UR
	6E5–45587–60	SHIM (T:0.50MM) LAINA (T:0.50MM)		1				UR UR
41	93341–930V2	BEARING COJINETES CON RODAMIENTOS		1				
42	93210–55M14	O-RING ANILLO O		1				

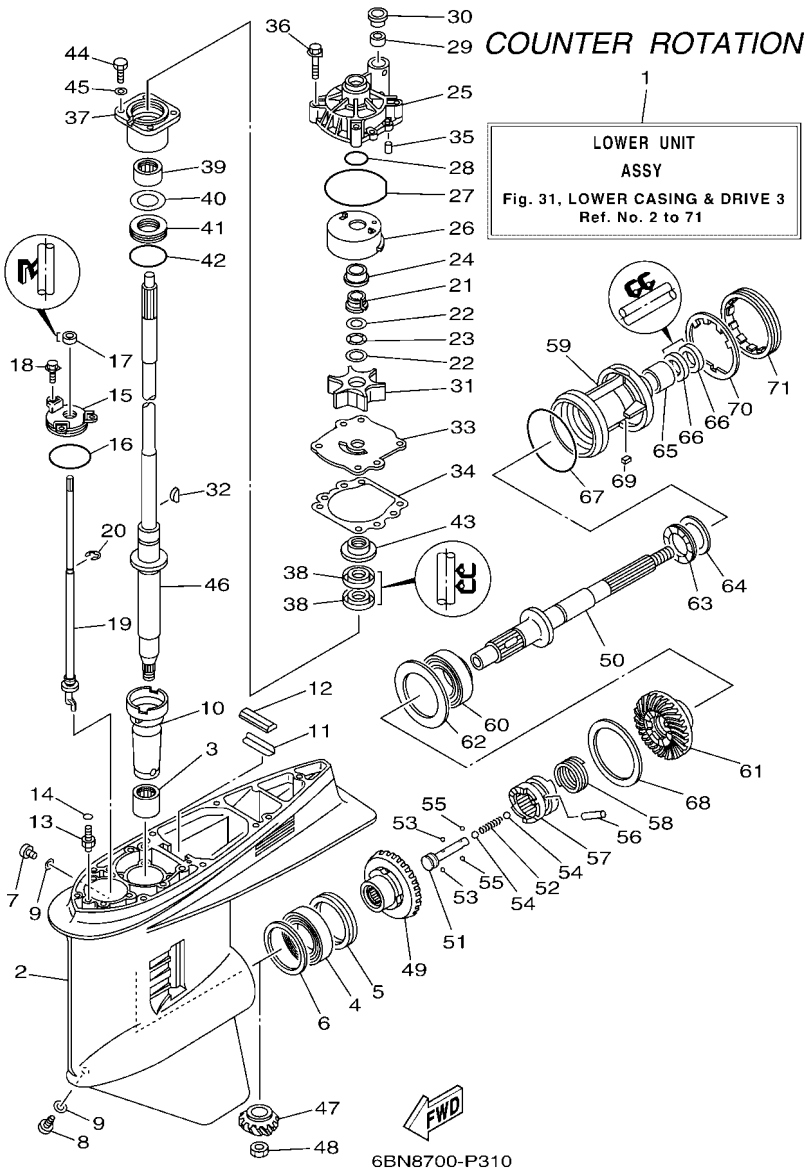

FIG. 31 LOWER CASING & DRIVE 3 — IMPULSOR E INFERIOR 3

REF. NO.	PART NO. CODIGO Nº	DESCRIPTION DESCRIPCION	63PE	64PE				REMARKS OBSERVACIONES
43	6E5–45344–00	COVER, OIL SEAL CUBIERTA SELLO ACEITE		1				
44	97095–08025	BOLT PERNO		4				
45	92995–08600	WASHER ARANDELA		4				
46	63P–45501–11	DRIVE SHAFT COMP. EJE DE MANDO COMPL.		1				X(25.3") X(25.3")
47	63P–45551–00	PINION (14T) PINON (14T)		1				
48	90170–16M01	NUT TUERCA		1				
49	64P–45560–10	GEAR 1 (28T) ENGRANAJE 1 (28T)		1				
50	6K1–45611–10	SHAFT, PROPELLER EJE PROPUSOR		1				
51	6E5–45634–02	SLIDE, SHIFT DESLIZADOR, CAMBIO		1				
52	90501–16M37	SPRING, COMPRESSION RESORTE DE COMPRESION		1				
53	93507–32009	BALL ESFERA		2				
54	93511–32017	BALL ESFERA		2				
55	93503–16003	BALL ESFERA		2				
56	90250–08M07	PIN, STRAIGHT PASADOR CILINDRICO		1				
57	6DA–45631–00	CLUTCH, DOG EMBRAGUE DE GARRA		1				
58	6E5–45633–01	RING, CROSS PIN ANILLO DE PASADOR		1				
59	6K1–45332–01–CA	HOUSING, BEARING CAJA BALERO 2		1				
60	93332–00048	BEARING COJINETE		1				
61	64P–45570–10	GEAR 2 (28T) ENGRANAJE 2 (28T)		1				
62	6K1–45576–00	WASHER, THRUST 2 ARANDELA DE EMPUJE AXIAL 2		1				
63	93341–440U5	BEARING COJINETES CON RODAMIENTOS		1				
64	6K1–45578–01	SHIM (T:0.10MM) LAINA (T:0.10MM)		1				UR UR
	6K1–45578–10	SHIM (T:0.12MM) LAINA (:0.12MM)		1				UR UR
	6K1–45578–20	SHIM (T:0.15MM) LAINA (T:0.15MM)		1				UR UR
	6K1–45578–30	SHIM (T:0.18MM) LAINA (T:0.18MM)		1				UR UR
	6K1–45578–40	SHIM (T:0.30MM) LAINA (T:0.30MM)		1				UR UR
	6K1–45578–50	SHIM (T:0.40MM) LAINA (T:0.40MM)		1				UR UR

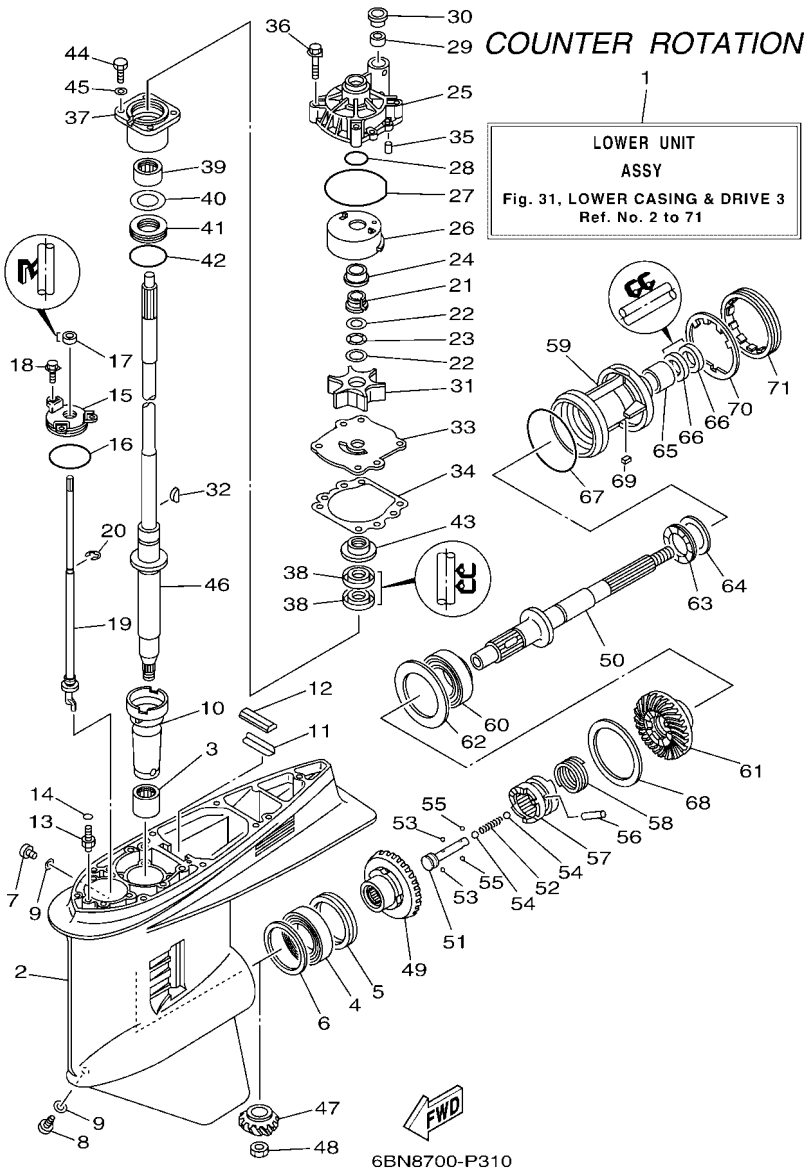

FIG. 31 LOWER CASING & DRIVE 3 — IMPULSOR E INFERIOR 3

REF. NO.	PART NO. CODIGO Nº	DESCRIPTION DESCRIPCION	63PE	64PE				REMARKS OBSERVACIONES
64	6K1–45578–60	SHIM (T:0.50MM) LAINA (T:0.50MM)		1				UR UR
65	93315–43061	BEARING COJINETE DE RODILLOS		1				
66	93101–30M17	OIL SEAL SELLO ACEITE		2				
67	93210–97M55	O-RING ANILLO O		1				
68	6G5–45577–02	SHIM (T:0.10MM) LAINA (T:0.10MM)		1				UR UR
	6G5–45577–10	SHIM (T:0.12MM) LAINA (T:0.12MM)		1				UR UR
	6G5–45577–20	SHIM (T:0.15MM) LAINA (T:0.15MM)		1				UR UR
	6G5–45577–30	SHIM (T:0.18MM) LAINA (T:0.18MM)		1				UR UR
	6G5–45577–40	SHIM (T:0.30MM) LAINA (T:0.30MM)		1				UR UR
	6G5–45577–50	SHIM (T:0.40MM) LAINA (T:0.40MM)		1				UR UR
	6G5–45577–60	SHIM (T:0.50MM) LAINA (T:0.50MM)		1				UR UR
69	90282–04M00	KEY, STRAIGHT CHAVETA, RECTA		1				
70	6G5–45383–01	WASHER, CLAW ARANDELA DE UNA		1				
71	6G5–45384–02	NUT TUERCA		1				

FIG. 32 LOWER CASING & DRIVE 4 — IMPULSOR E INFERIOR 4

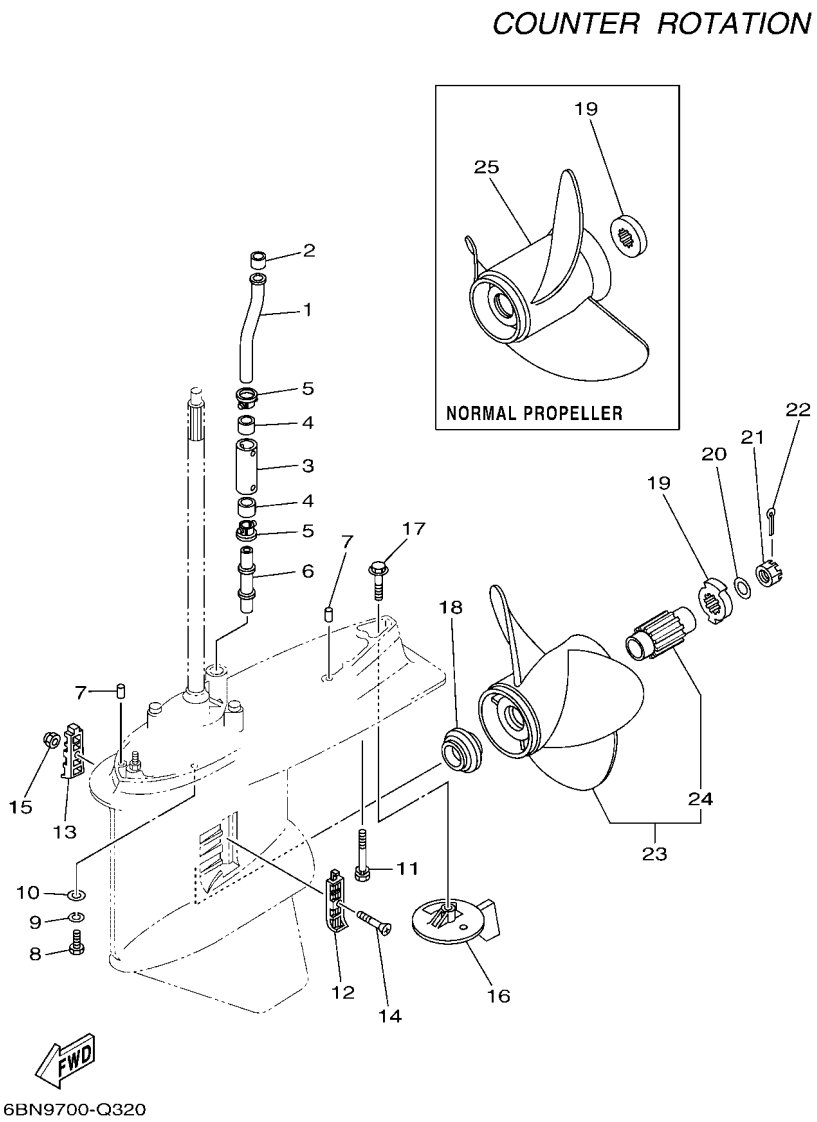

REF. NO.	PART NO. CODIGO Nº	DESCRIPTION DESCRIPCION	63PE	64PE				REMARKS OBSERVACIONES
1	63P–44361–00	TUBE, WATER 1 TUBO DE AGUA 1		1				
2	6E5–44365–00	DAMPER, WATER SEAL 1 HULE DE SELLO DE AGUA 1		1				
3	63P–44362–00	TUBE, WATER 2 TUBO DE AGUA 2		1				X(25.3") X(25.3")
4	6E5–44365–00	DAMPER, WATER SEAL 1 HULE DE SELLO DE AGUA 1		2				X(25.3") X(25.3")
5	6E5–44312–00	COVER, WATER PUMP HOUSING CUBIERTA CAJA BOMBA DE AGUA		2				X(25.3") X(25.3")
6	63P–44363–00	TUBE, WATER 3 TUBO DE AGUA 3		1				X(25.3") X(25.3")
7	93608–16M16	PIN, DOWEL PASADOR DE CLAVIJA		2				
8	97095–10045	BOLT PERNO		6				
9	92995–10100	WASHER ARANDELA		6				
10	92995–10600	WASHER ARANDELA		6				
11	90119–10008	BOLT, WITH WASHER TORNILLO CON ARANDELA		1				X(25.3") X(25.3")
12	6J9–45214–00	COVER, WATER INLET 1 CUBIERTA ENTRADA AGUA 1		1				
13	6J9–45215–00	COVER, WATER INLET 2 CUBIERTA ENTRADA AGUA 2		1				
14	90152–05M08	SCREW, COUNTERSUNK TORNILLO EMBUTIDO		1				
15	90185–05002	NUT, NYLON TUERCA AUTOBLOCANTE		1				
16	6K1–45371–02	TAB-TRIM QUILLA ESTABILIZADOR		1				
17	90105–10M00	BOLT, FLANGE TORNILLO		1				
18	63P–45987–00	SPACER 1 ESPACIADOR 1		1				
19	6CE–45997–00	SPACER 2 ESPACIADOR 2		1				FOR SDS PROP. FOR SDS PROP.
	688–45997–01	SPACER 2 ESPACIADOR 2		1				FOR NORMAL PROP. FOR NORMAL PROP.
20	92990–18200	WASHER ARANDELA PLANA		1				
21	90171–18M04	NUT, CASTLE TUERCA ENTALLADA		1				
22	91490–40030	PIN. COTTER CHAVETA		1				
23	68G–45970–10	PROPELLER (3X14-1/2X15-ML) PROPELA (3X14-1/2X15-ML)		1				UR SDS PROP. UR SDS PROP.
	68G–45972–10	PROPELLER (3X14-1/4"X17"-ML) PROPELA (3X14-1/4"X17"-ML)		1				UR SDS PROP. UR SDS PROP.
	68G–45978–10	PROPELLER (3X14-1/4"X18"-ML) PROPELA (3X14-1/4"X18"-ML)		1				UR SDS PROP. UR SDS PROP.
	68G–45974–10	PROPELLER (3X13-3/4"X19"-ML) PROPELA (3X13-3/4"X19"-ML)		1				UR SDS PROP. UR SDS PROP.

FIG. 32 LOWER CASING & DRIVE 4 — IMPULSOR E INFERIOR 4

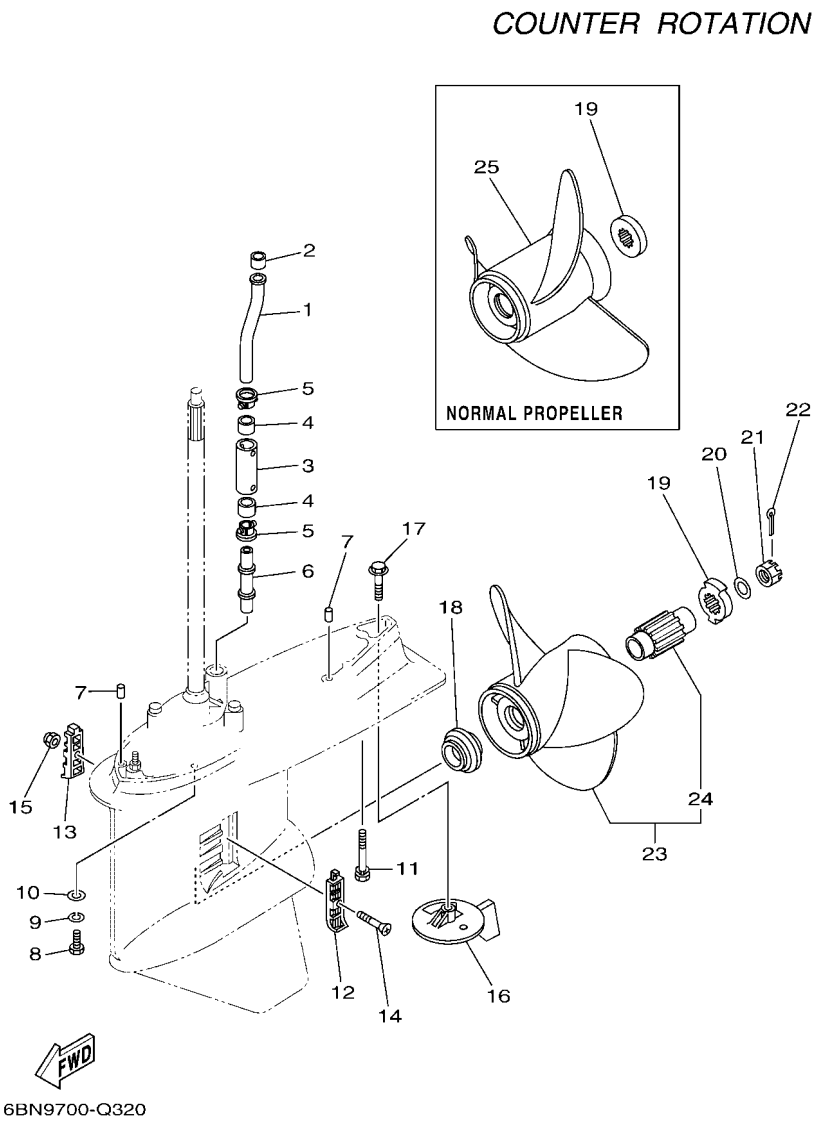

REF. NO.	PART NO. CODIGO Nº	DESCRIPTION DESCRIPCION	63PE	64PE				REMARKS OBSERVACIONES
23	68G–45976–10	PROPELLER (3X13-3/4"X21"-ML) PROPELA (3X13-3/4"X21"-ML)		1				UR SDS PROP. UR SDS PROP.
24	6CE–45C81–00	.DAMPER RUBBER, PROPELLER 1 .AMORTIGUADOR PROPELA 1		1				
25	6K1–45970–01	PROPELLER (3X15-1/4"X15"-ML) PROPELA (3X15-1/4"X15"-ML)		1				UR NORMAL PROP. UR NORMAL PROP.
	6K1–45972–01	PROPELLER (3X13-3/4"X21"-ML) PROPELA (3X13-3/4"X21"-ML)		1				UR NORMAL PROP. UR NORMAL PROP.
	6K1–45974–02	PROPELLER (3X13-3/4"X19"-ML1) PROPELA (3X13-3/4"X19"-ML1)		1				UR NORMAL PROP. UR NORMAL PROP.
	6K1–45976–00	PROPELLER (3X13-3/8"X23"-ML) PROPELA (3X13-3/8"X23"-ML)		1				UR NORMAL PROP. UR NORMAL PROP.
	6K1–45978–02	PROPELLER (3X13-3/4"X17"-ML1) PROPELA (3X13-3/4"X17"-ML1)		1				UR NORMAL PROP. UR NORMAL PROP.
	6K1–45945–00	PROPELLER (3X14"X19"-ML) PROPELA (3X14"X19"-ML)		1				UR NORMAL PROP. UR NORMAL PROP.
	6K1–45947–00	PROPELLER (3X14-1/2"X17"-ML) PROPELA (3X14-1/2"X17"-ML)		1				UR NORMAL PROP. UR NORMAL PROP.
	6R1–45970–A1	PROPELLER (3X15-1/4"X19"-ML) PROPELA (3X15-1/4"X19"-ML)		1				UR NORMAL PROP. UR NORMAL PROP.
	6R1–45972–A0	PROPELLER (3X14-7/8"X21"-ML) PROPELA (3X14-7/8"X21"-ML)		1				UR NORMAL PROP. UR NORMAL PROP.
	6R1–45974–A0	PROPELLER (3X14-1/2"X23"-ML) PROPELA (3X14-1/2"X23"-ML)		1				UR NORMAL PROP. UR NORMAL PROP.
	6R1–45976–A0	PROPELLER (3X15-1/4"X15"-ML) PROPELA (3X15-1/4"X15"-ML)		1				UR NORMAL PROP. UR NORMAL PROP.
	6R1–45978–A0	PROPELLER (3X15-1/4"X17"-ML) PROPELA (3X15-1/4"X17"-ML)		1				UR NORMAL PROP. UR NORMAL PROP.

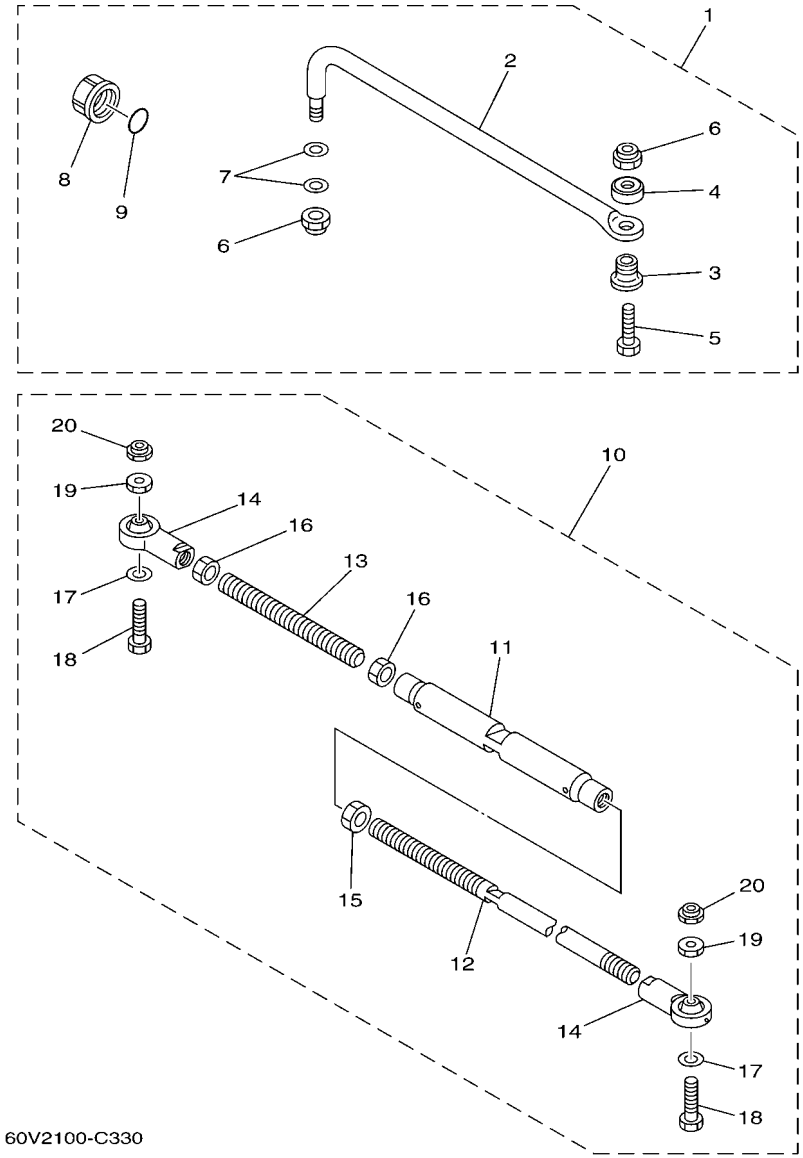

FIG. 33 STEERING GUIDE — DIRECCIONGUIAR

REF. NO.	PART NO. CODIGO Nº	DESCRIPTION DESCRIPCION	63PE	64PE				REMARKS OBSERVACIONES
1	6E5–61350–02	STEERING GUIDE ATTACHMENT KIT ESTUCHE ADITAMENTO GUIA DE TIM	1					AP FOR BRA AP FOR BRA
2	6E5–61351–01	.ROD, STEERING LINK .VARILLA ESLABON DIRECCION	1					
3	90387–10M61	.COLLAR .ESPACIADOR	1					
4	90560–12M01	.SPACER .SEPARADOR	1					
5	6E5–61355–00	.BOLT .TORNILLO	1					
6	90185–09M01	.NUT, SELF-LOCKING .TUERCA AUTOBLOCANTE	2					
7	90201–10M20	.WASHER, PLATE .ARANDELA PLANA	2					
8	6E5–43145–01	.CAP, CLAMP BRACKET .TAPA	1					
9	93210–16275	.O-RING .ANILLO O	1					
10	6E5–61301–01	TWIN KIT (L:600-800MM) KIT ADITAMENTO (L:600-800MM)		1				AP AP
11	6E5–61313–00	.ADJUSTER .AJUSTADOR		1				
12	6E5–61311–11	.TIE BAR .BARRA SEPARADORA		1				
13	6E5–61315–00	.TIE BAR .ROTOR DE BOMBA AGUA		1				
14	6E5–61303–00	.STEERING AXLE COMP. .OJO-DIRECCION COMPL.		2				
15	90170–14M06	.NUT .TUERCA		1				
16	95380–14700	.NUT .TUERCA		2				
17	90201–10M76	.WASHER, PLATE .ARANDELA PLANA		2				
18	90101–09M70	.BOLT .TORNILLO		2				
19	90170–09M05	.NUT .TUERCA		2				
20	90185–09M01	.NUT, SELF-LOCKING .TUERCA AUTOBLOCANTE		2				

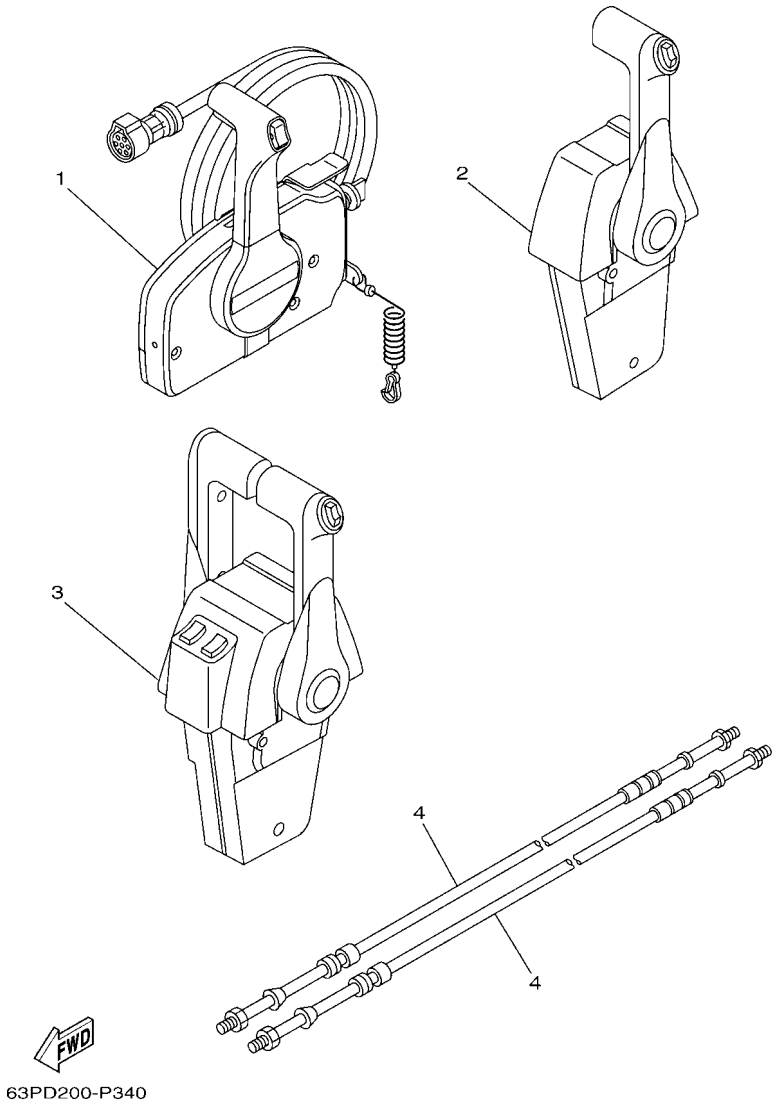

FIG. 34 REMOTE CONTROL BOX — CONTROL REMOTO COMPLETO

REF. NO.	PART NO. CODIGO Nº	DESCRIPTION DESCRIPCION	63PE	64PE				REMARKS OBSERVACIONES
1	703–48207–21	REMOTE CONTROL ASSY (10P, PTT) REMOTO CONTROL COMPL. (10P)	1					AP BRA,CSA WITH PT/T SW. AP BRA,CSA WITH PT/T SW.
2	704–48205–P1	REMOTE CONTROL ASSY (RIGHT) REMOTO CONTROL COMPL (RECTO)	1					AP CAR WITH PT/T SW. AP CAR WITH PT/T SW.
3	704–48207–P1	REMOTE CONTROL ASSY REMOTO CONTROL COMPL.		1				AP WITH PT/T SW. AP WITH PT/T SW.
4	701–48320–50	CABLE, REMOTE CONTROL L=15F CABLE CONTROL REMOTO L=15F	2	2				UR UR
	701–48320–60	CABLE, REMOTE CONTROL L=16F CABLE CONTROL REMOTO L=16F	2	2				UR UR
	701–48320–80	CABLE, REMOTE CONTROL L=17F CABLE CONTROL REMOTO L=17F	2	2				UR UR
	701–48350–00	CABLE, REMOTE CONTROL L=21F CABLE CONTROL REMOTO L=21F	2	2				UR UR
	701–48350–20	CABLE, REMOTE CONTROL L=23F CABLE CONTROL REMOTO L=23F	2	2				UR UR

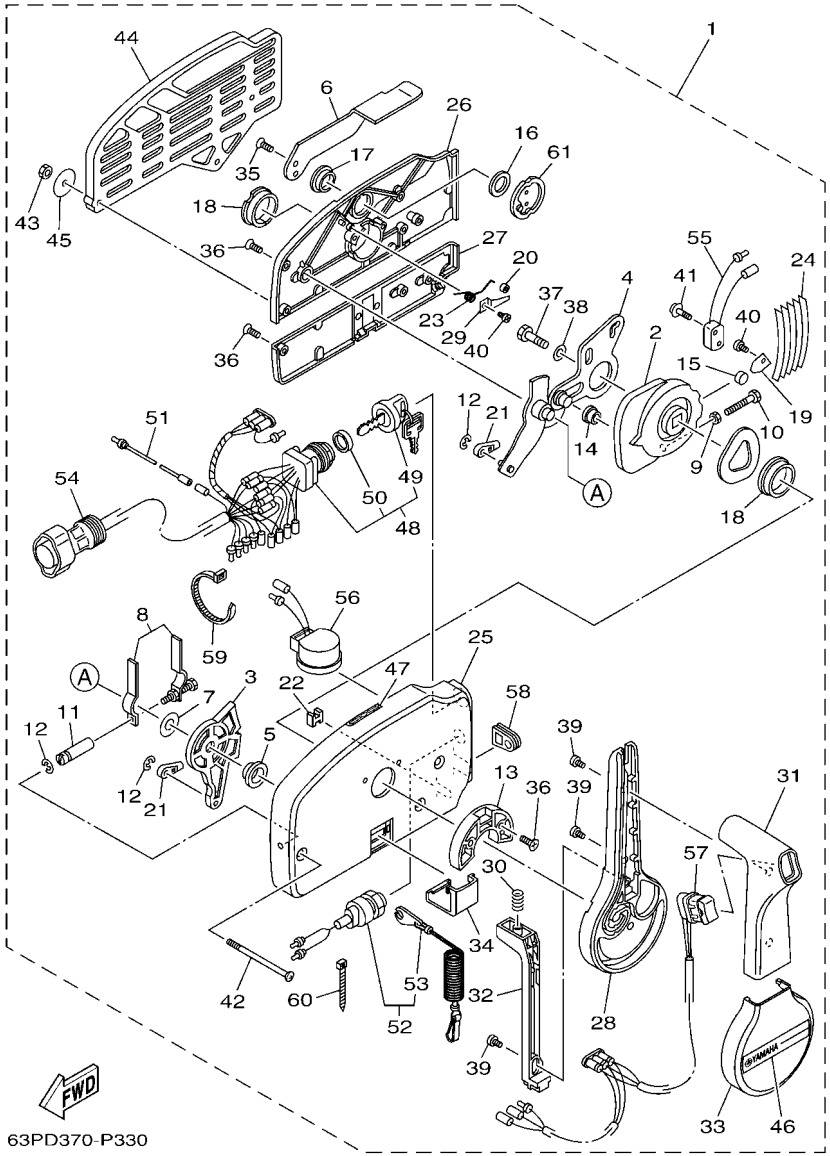

FIG. 35 REMOTE CONTROL ASSY 1 — CONTROL REMOTO COMPL 1

REF. NO.	PART NO. CODIGO Nº	DESCRIPTION DESCRIPCION	63PE	64PE				REMARKS OBSERVACIONES
1	703–48207–21	REMOTE CONTROL ASSY (10P, PTT) REMOTO CONTROL COMPL. (10P)	1					AP BRA,CSA WITH PT/T SW. AP BRA,CSA WITH PT/T SW.
2	703–48232–00	.GEAR .ENGRANAJE 1	1					
3	703–48271–00	.ARM, SHIFT .BRAZO CAMBIADOR	1					
4	703–48261–01	.ARM, THROTTLE .BRAZO ACELERADOR	1					
5	703–48235–00	.BUSHING .BUJE	1					
6	703–48152–10	.KNOB, FREE ACCEL. .PERILLA	1					
7	703–48268–00	.SPACER .ESPACIADOR 3	1					
8	703–48264–00	.FRICTION, THROTTLE .FRICCION DE ACELERADOR	1					
9	95380–05600	.NUT .TUERCA	1					
10	97380–05025	.BOLT .TORNILLO HEXAGONAL	1					
11	703–48265–10	.SHAFT, FRICTION .EJE FRICCION	1					
12	93430–06024	.CIRCLIP .SEGURO	3					
13	703–48245–00	.PLATE, LOCK .PLACA CERRADURA	1					
14	703–48252–00	.ROLLER, CAM .RODILLO LEVA	1					
15	701–48248–00	.ROLLER, FREE ACCEL. .RODILLO ACELERADOR LIBRE	1					
16	703–48198–00	.WASHER, WAVE .RONDANA ONDULADA 3	1					
17	703–48243–00	.BUSHING .BUJE 3	1					
18	703–48236–00	.BUSHING 1 .BUJE	2					
19	703–48189–00	.RETAINER .RETENEDOR	1					
20	703–48234–00	.ROLLER, DETENT .RODILLO	1					
21	703–48345–01	.CABLE END, REMOTE CONTROL 2 .TERMINAL CABLE DE CONTROL REMO	2					
22	703–48358–00	.ANCHOR, CABLE .ABRAZADERA CABLE	1					
23	703–48244–00	.SPRING, FREE ACCEL. .RESORTE ACELERADOR LIBRE	1					
24	703–48238–00	.SPRING, DETENT .RESORTE	5					
25	703–48211–10	.HOUSING,1 .CAJA	1					
26	703–48212–10	.BACK PLATE 1 .PLACA TRASERA 1	1					
27	703–48213–10	.BACK PLATE 2 .PLACA TRASERA 2	1					

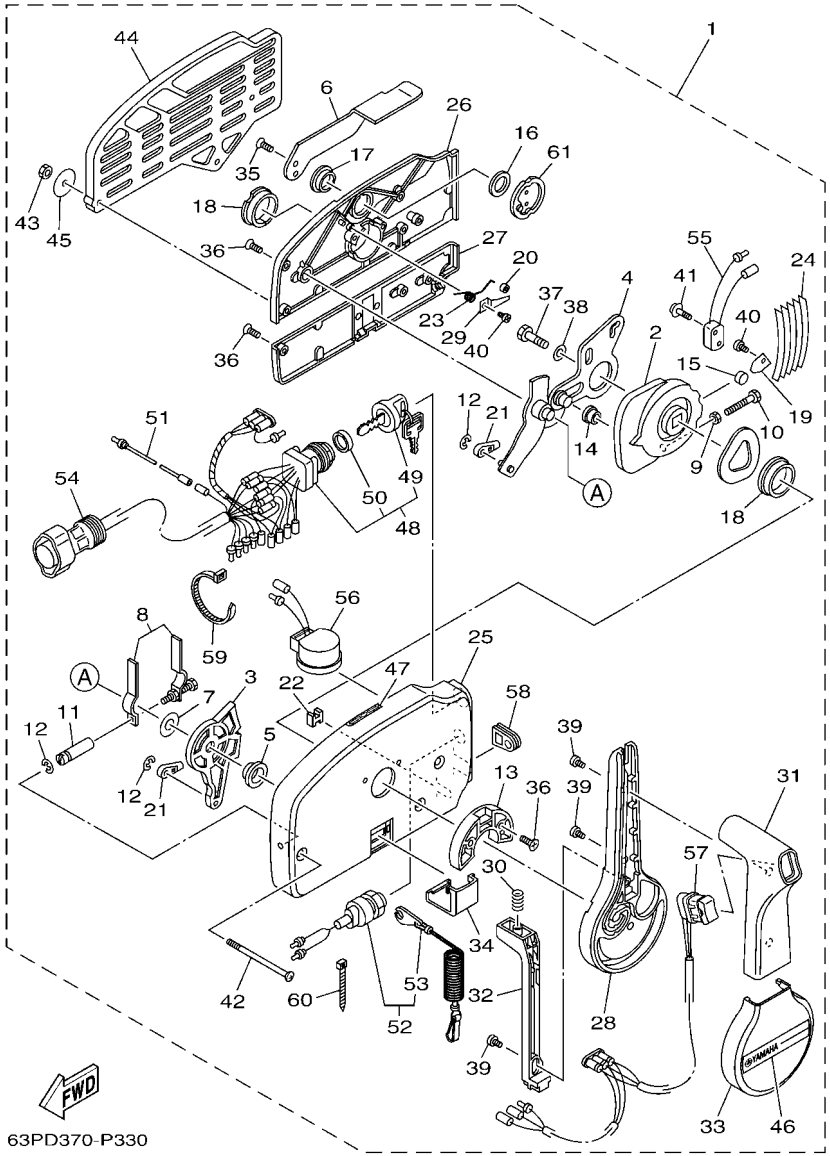

FIG. 35 REMOTE CONTROL ASSY 1 — CONTROL REMOTO COMPL 1

REF. NO.	PART NO. CODIGO Nº	DESCRIPTION DESCRIPCION	63PE	64PE				REMARKS OBSERVACIONES
28	703–48221–10	.LEVER, CONTROL .PALANCA CONTROL	1					
29	703–48246–00	.SPACER .ESPACIADOR	1					
30	703–48227–00	.SPRING, NEUTRAL LOCK .RESORTE DE SEGURO	1					
31	703–48222–20	.GRIP, CONTROL LEVER .MANGO DE PALANCA CONTROL	1					SINGLE SINGLE
32	703–48223–10	.LOCK, NEUTRAL .CERRADURA NEUTRO	1					
33	703–48225–10	.COVER .CUBIERTA	1					
34	703–48219–10	.COVER, LEAD .CUBIERTA	1					
35	703–48281–00	.SCREW .TORNILLO 1	2					
36	703–44189–20	.SCREW .TORNILLO	7					
37	97380–08030	.BOLT .TORNILLO HEXAGONAL	1					
38	92990–08600	.WASHER, PLATE .ARANDELA PLANA	1					
39	703–48128–10	.SCREW 2 .TORNILLO 2	3					
40	98580–04006	.SCREW, PAN HEAD .TORNILLO DE CABEZA CRUZADA	2					
41	703–48129–00	.SCREW 3 .TORNILLO 3	2					
42	703–44189–30	.SCREW .TORNILLO	3					
43	95380–06600	.NUT, HEXAGON .TUERCA	3					
44	703–48293–10	.SPACER, REMOTE CONTROL .ESPACIADOR	1					SINGLE SINGLE
45	701–48287–00	.WASHER .ARANDELA	3					
46	703–48215–10	.GRAPHIC .CALCOMANIA 1	1					
47	6X3–44191–00	.INDICATOR, SHIFT .INDICADOR DE CAMBIOS	1					
48	703–82510–44	.MAIN SWITCH ASSY .CONJUNTO DE LLAVE IGNICION	1					
49	703–82577–00	..CAP, KEY ..TAPA	1					
50	6K1–82532–00	..CAP ..TAPA	1					
51	703–82531–00	.WIRE, LEAD (L70) .CABLE CONDUCTOR (L70)	1					
52	688–82575–02	.ENGINE STOP SWITCH ASSY .INTERRUPTOR DE PARADA COMPL	1					
53	682–82556–00	..LANYARD, STOP SWITCH ..CORDON DE INTERRUPTOR PARADA	1					
54	688–8258A–20	.EXTENSION, WIRE HARNESS (4.9M) .EXTENSION, ARNES DE CABLES (4.	1					(10P) (10P)

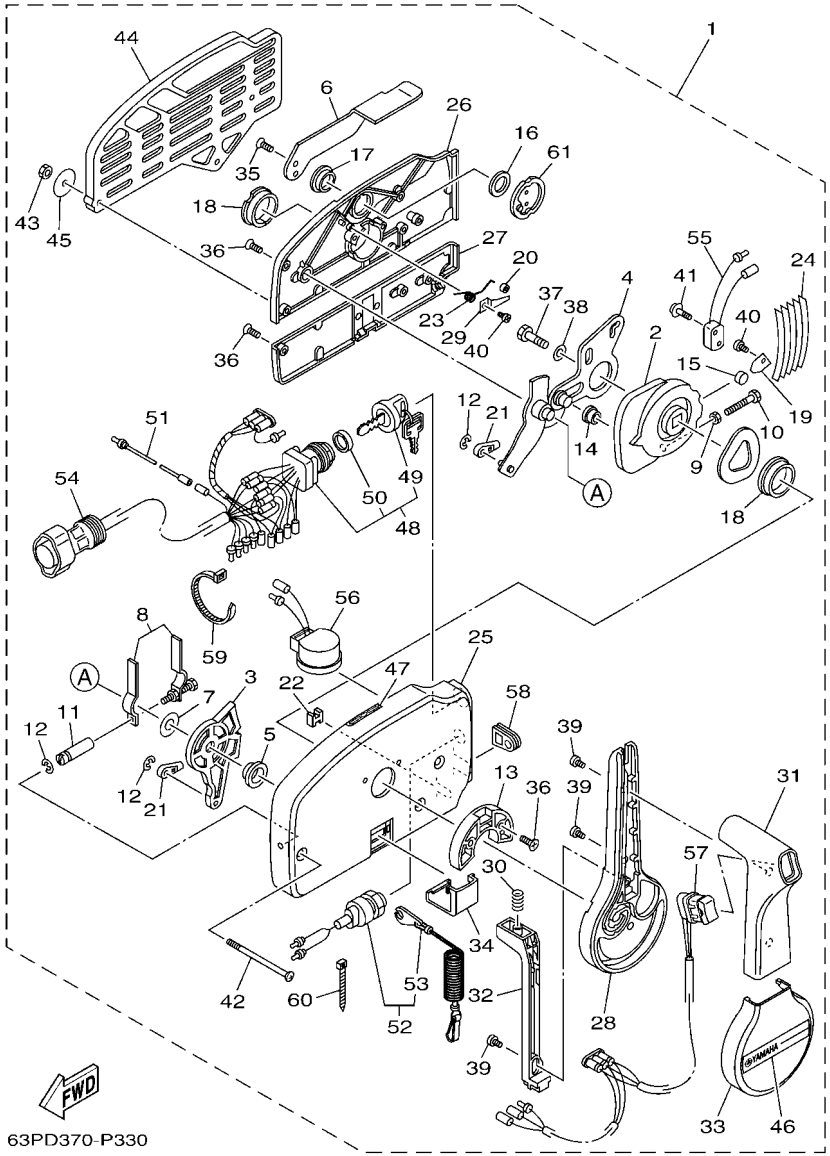

FIG. 35 REMOTE CONTROL ASSY 1 — CONTROL REMOTO COMPL 1

REF. NO.	PART NO. CODIGO Nº	DESCRIPTION DESCRIPCION	63PE	64PE				REMARKS OBSERVACIONES
55	703–82540–00	.NEUTRAL SWITCH ASSY .INTERRUPTOR NEUTRAL COMPL	1					
56	703–83383–11	.BUZZER .ZUMBADOR	1					
57	703–82563–20	.TRIM & TILT SWITCH ASSY .INTERRUPTOR DE INCLINACION	1					WITH PT/T SW. WITH PT/T SW.
58	703–48284–10	.GROMMET .TAPON	1					
59	703–82591–00	.BAND .BANDA	1					
60	703–82592–00	.BAND .BANDA	1					
61	703–48153–00	.SHAFT, FREE ACCEL. .EJE	1					

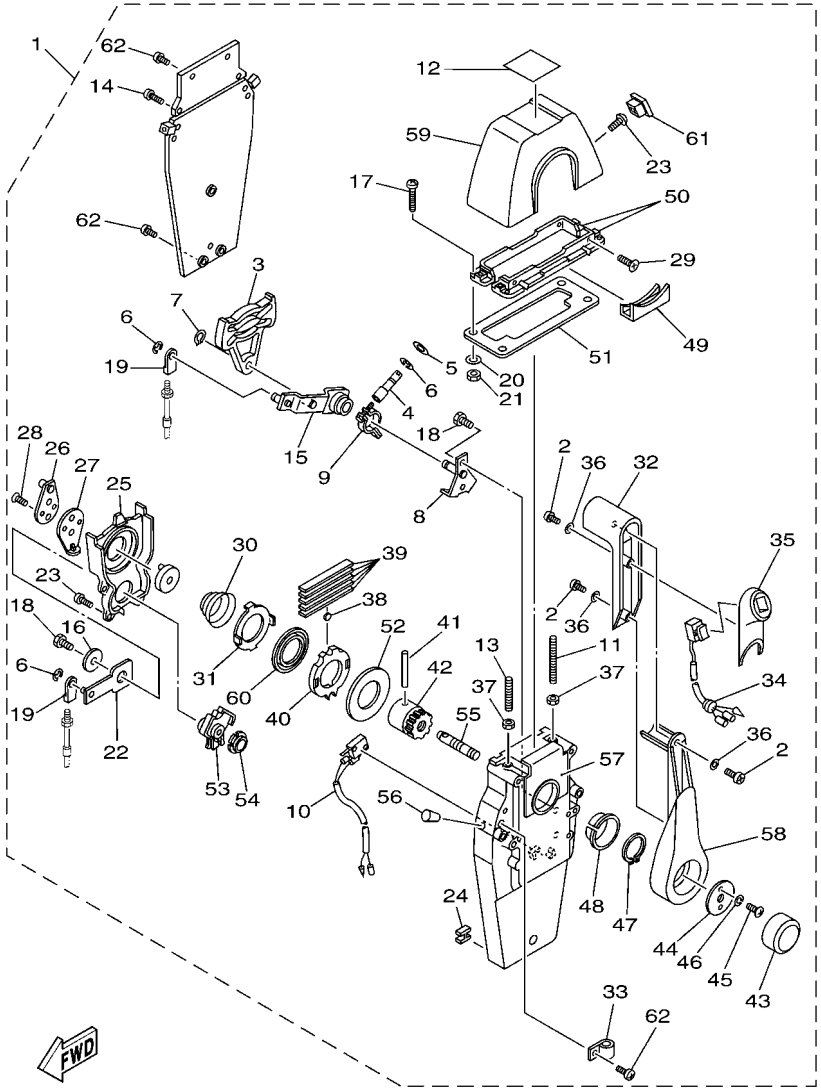

6C23100-F340

FIG. 36 REMOTE CONTROL ASSY 2 — CONTROL REMOTO COMPL 2

REF. NO.	PART NO. CODIGO Nº	DESCRIPTION DESCRIPCION	63PE	64PE				REMARKS OBSERVACIONES
1	704–48205–P1	REMOTE CONTROL ASSY (RIGHT) REMOTO CONTROL COMPL (RECTO)	1					AP CAR WITH PT/T SW. AP CAR WITH PT/T SW.
2	704–48129–00	.SCREW 3 .TORNILLO 3	3					
3	EL8–48251–00	.PLATE, CAM .PLACA,LEVA	1					
4	704–48265–00	.SHAFT, FRICTION .EJE FRICCION	1					
5	701–48246–00	.SPACER .ESPACIADOR	1					
6	93430–06024	.CIRCLIP .SEGURO	4					
7	EL8–48259–00	.CIRCLIP 1 .SEGURO	1					
8	704–48262–00	.SHAFT, THROTTLE .EJE DE ACELERADOR	1					
9	704–48264–00	.THROTTLE, FRICTION .FRICCION DE ACELERADOR	1					
10	704–82540–20	.NEUTRAL SWITCH ASSY .INTERRUPTOR NEUTRAL COMPL	1					
11	EL8–48281–00	.SCREW .TORNILLO 1	1					
12	704–48215–21	.GRAPHIC .CALCOMANIA 1	1					
13	704–48281–00	.SCREW .TORNILLO 1	1					
14	97890–05025	.SCREW, PAN HEAD .TORNILLO	2					
15	704–48261–00	.ARM, THROTTLE .BRAZO ACELERADOR	1					
16	EL8–48191–00	.WASHER 1 .ARANDELA	1					
17	704–48283–00	.SCREW .TORNILLO 3	4					
18	97380–06018	.BOLT .TORNILLO HEXAGONAL	3					
19	703–48345–01	.CABLE END, REMOTE CONTROL 2 .TERMINAL CABLE DE CONTROL REMO	2					
20	704–48287–00	.WASHER .ARANDELA	4					
21	95380–05600	.NUT .TUERCA	4					
22	704–48271–00	.ARM, SHIFT .BRAZO CAMBIADOR	1					
23	EL8–48127–00	.SCREW 1 .TORNILLO 1	10					
24	703–48358–00	.ANCHOR, CABLE .ABRAZADERA CABLE	1					
25	704–48231–00	.HOUSING, GEAR .CAJA,ENGRANAJE	1					
26	EL8–48241–00	.ARM, DRIVE .BRAZO,MANDO	1					
27	EL8–48254–00	.STOPPER, THROTTLE ADJUSTING .TAPON	1					

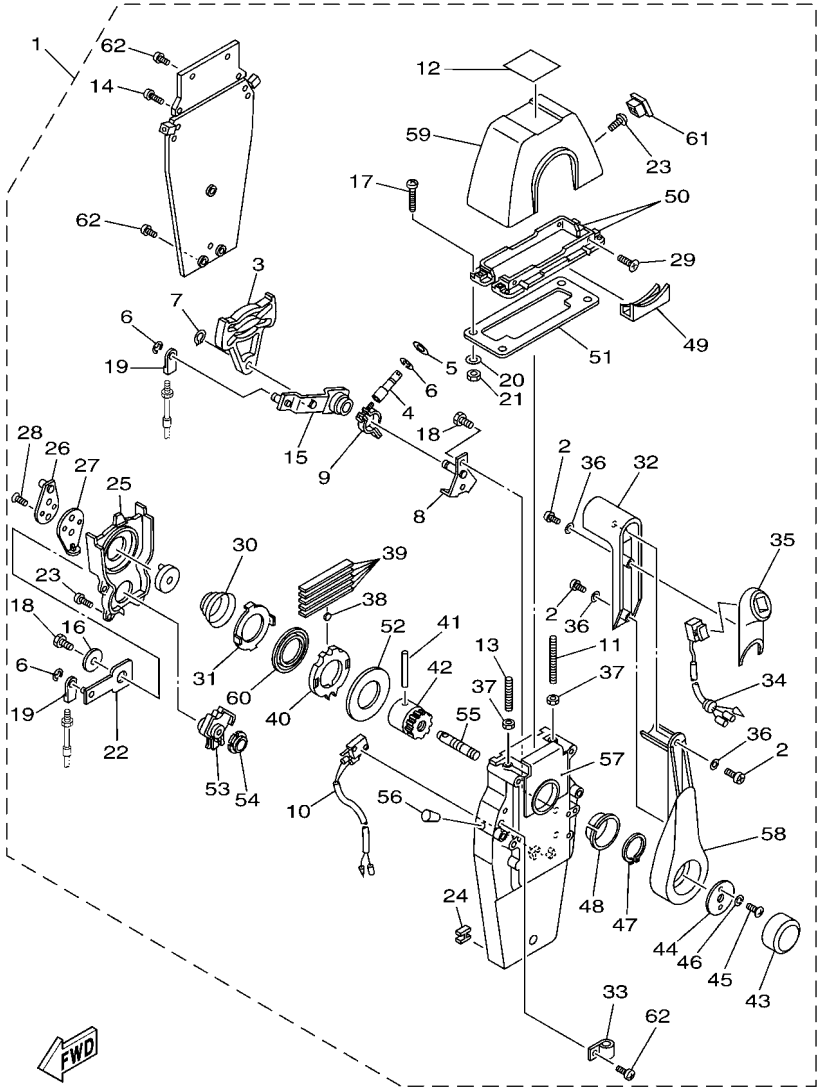

6C23100-F340

FIG. 36 REMOTE CONTROL ASSY 2 — CONTROL REMOTO COMPL 2

REF. NO.	PART NO. CODIGO Nº	DESCRIPTION DESCRIPCION	63PE	64PE				REMARKS OBSERVACIONES
28	92780–06020	.SCREW, FLAT HEAD .TORNILLO CABEZA PLANA	2					
29	98780–05018	.SCREW, FLAT HEAD .TORNILLO CABEZA PLANA	4					
30	EL8–48244–00	.SPRING, FREE ACCEL. .RESORTE ACELERADOR LIBRE	1					
31	EL8–48245–00	.PLATE, LOCK .PLACA CERRADURA	1					
32	704–48222–P0	.GRIP, CONTROL LEVER .MANGO DE PALANCA CONTROL	1					
33	704–82594–00	.CLAMP .GRAMPA	1					
34	704–82563–41	.TRIM & TILT SWITCH ASSY .INTERRUPTOR DE INCLINACION	1					
35	704–48229–P1	.GRIP, CONTROL LEVER .MANGO DE PALANCA CONTROL 2	1					
36	92990–05300	.WASHER, INTERNAL TOOTH .ARANDELA PLANA	3					
37	95380–06600	.NUT, HEXAGON .TUERCA	2					
38	701–48248–00	.ROLLER, FREE ACCEL. .RODILLO ACELERADOR LIBRE	1					
39	704–48238–00	.SPRING, DETENT .RESORTE	5					
40	704–48232–P1	.GEAR .ENGRANAJE 1	1					
41	EL8–48164–00	.PIN 2 .PASADOR 2	1					
42	704–48242–10	.SHAFT, DRIVE .EJE, PROPULSION	1					
43	6X3–48225–20	.COVER .CUBIERTA	1					
44	704–48192–00	.WASHER 2 .RONDANA 2	1					
45	97890–06018	.SCREW, PAN HEAD .TORNILLO	2					
46	92990–06300	.WASHER, INTERNAL TOOTH .ARANDELA PLANA	2					
47	EL8–48279–00	.CIRCLIP 2 .SEGURO2	1					
48	704–48234–00	.BUSHING 1 .BUJE	1					
49	704–48219–P0	.COVER, LEAD .CUBIERTA	1					
50	704–48144–10	.PLATE, STOPPER 2 .PLACA, RETEN 2	2					
51	704–48176–00	.GROMMET .TOPON	1					
52	704–48192–P0	.WASHER 2 .RONDANA 2	1					
53	704–48233–00	.GEAR 2 .ENGRANAJE 2	1					
54	704–48235–00	.BUSHING .BUJE	1					

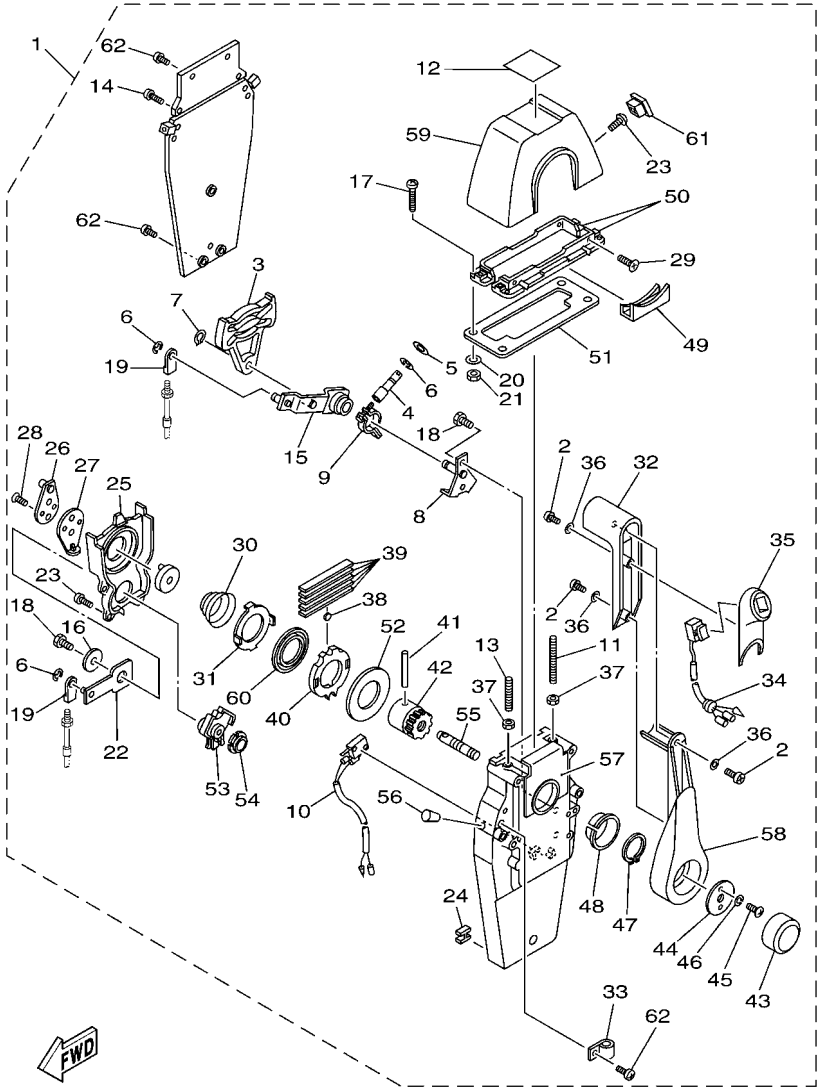

FIG. 36 REMOTE CONTROL ASSY 2 — CONTROL REMOTO COMPL 2

REF. NO.	PART NO. CODIGO Nº	DESCRIPTION DESCRIPCION	63PE	64PE				REMARKS OBSERVACIONES
55	704–48153–00	.SHAFT, FREE ACCEL. .EJE	1					
56	704–48166–00	.PLUG .TAPON	1					
57	704–48284–P0	.GROMMET .TAPON	1					
58	704–48221–P0	.LEVER, CONTROL .PALANCA CONTROL	1					
59	704–48119–31	.COVER .CUBIERTA	1					
60	704–48178–10	.PLATE, SHIFT .PLACA	1					
61	704–48167–01	.PLUG .TAPON AGUJERO	1					
62	97890–05016	.SCREW, PAN HEAD .TORNILLO	3					

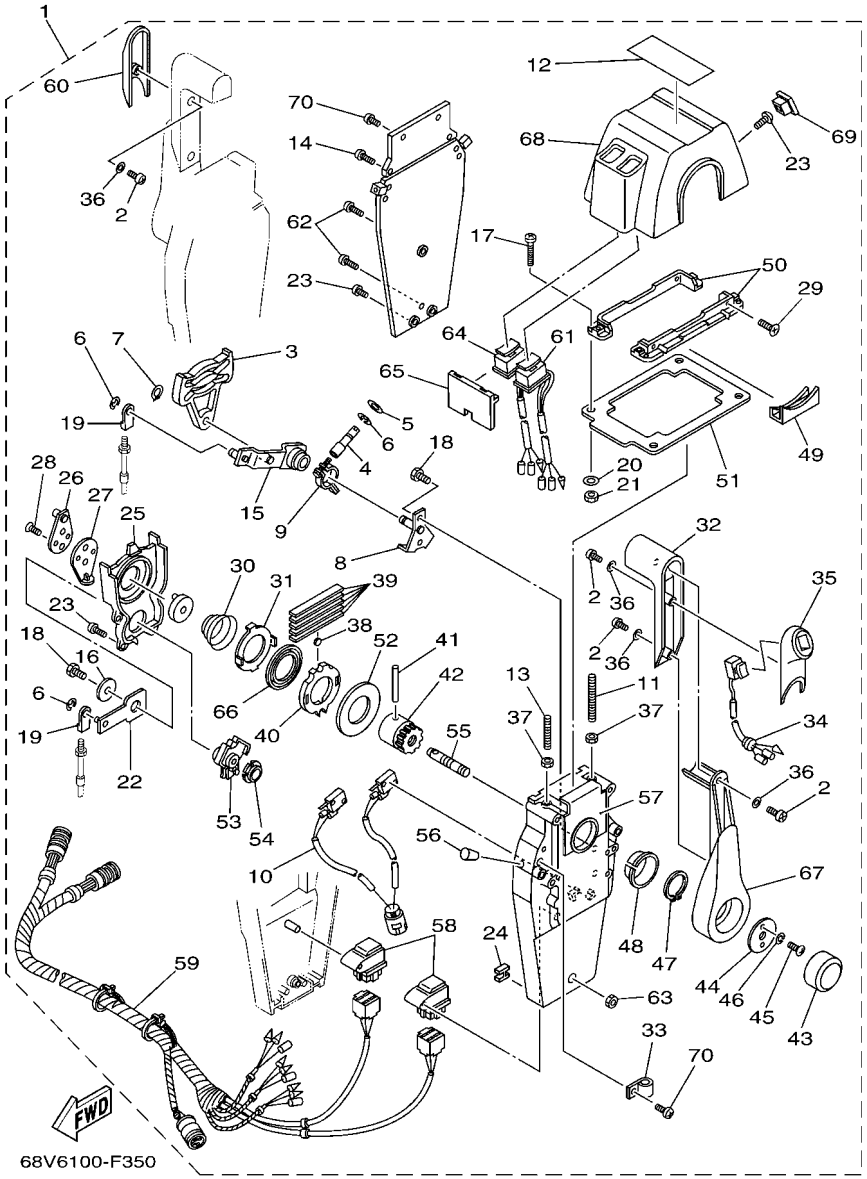

FIG. 37 REMOTE CONTROL ASSY 3 — CONTROL REMOTO COMPL 3

REF. NO.	PART NO. CODIGO Nº	DESCRIPTION DESCRIPCION	63PE	64PE				REMARKS OBSERVACIONES
1	704–48207–P1	REMOTE CONTROL ASSY REMOTO CONTROL COMPL.		1				AP WITH PT/T SW. AP WITH PT/T SW.
2	704–48129–00	.SCREW 3 .TORNILLO 3		6				
3	EL8–48251–00	.PLATE, CAM .PLACA,LEVA		2				
4	704–48265–00	.SHAFT, FRICTION .EJE FRICCION		2				
5	701–48246–00	.SPACER .ESPACIADOR		2				
6	93430–06024	.CIRCLIP .SEGURO		8				
7	EL8–48259–00	.CIRCLIP 1 .SEGURO		2				
8	704–48262–00	.SHAFT, THROTTLE .EJE DE ACELERADOR		2				
9	704–48264–00	.THROTTLE, FRICTION .FRICCION DE ACELERADOR		2				
10	704–82540–30	.NEUTRAL SWITCH ASSY .INTERRUPTOR NEUTRAL COMPL		1				
11	EL8–48281–00	.SCREW .TORNILLO 1		2				
12	704–48215–30	.GRAPHIC .CALCOMANIA 1		1				
13	704–48281–00	.SCREW .TORNILLO 1		2				
14	97890–05025	.SCREW, PAN HEAD .TORNILLO		4				
15	704–48261–00	.ARM, THROTTLE .BRAZO ACELERADOR		2				
16	EL8–48191–00	.WASHER 1 .ARANDELA		2				
17	704–48283–00	.SCREW .TORNILLO 3		4				
18	97380–06018	.BOLT .TORNILLO HEXAGONAL		6				
19	703–48345–01	.CABLE END, REMOTE CONTROL 2 .TERMINAL CABLE DE CONTROL REMO		4				
20	704–48287–00	.WASHER .ARANDELA		4				
21	95380–05600	.NUT .TUERCA		4				
22	704–48271–00	.ARM, SHIFT .BRAZO CAMBIADOR		2				
23	EL8–48127–00	.SCREW 1 .TORNILLO 1		18				
24	703–48358–00	.ANCHOR, CABLE .ABRAZADERA CABLE		2				
25	704–48231–00	.HOUSING, GEAR .CAJA,ENGRANAJE		2				
26	EL8–48241–00	.ARM, DRIVE .BRAZO,MANDO		2				
27	EL8–48254–00	.STOPPER, THROTTLE ADJUSTING .TAPON		2				

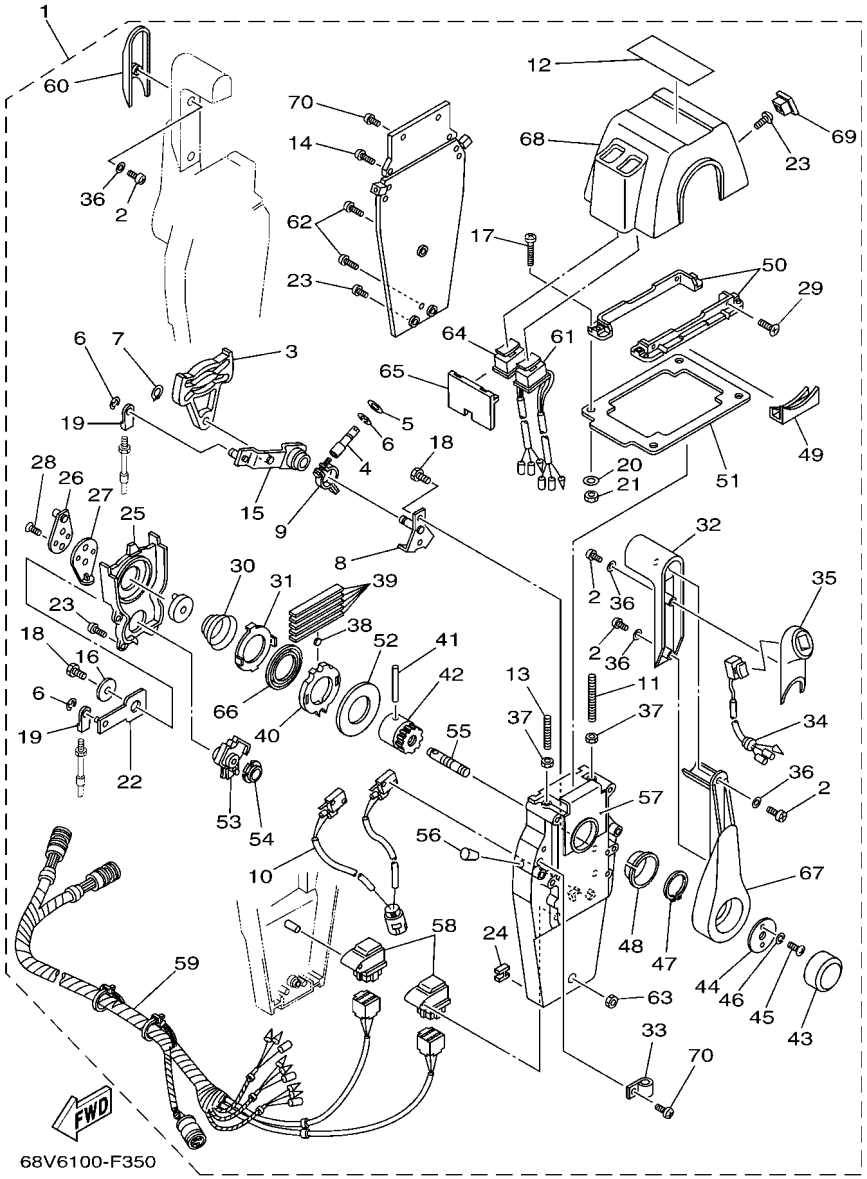

FIG. 37 REMOTE CONTROL ASSY 3 — CONTROL REMOTO COMPL 3

REF. NO.	PART NO. CODIGO Nº	DESCRIPTION DESCRIPCION	63PE	64PE				REMARKS OBSERVACIONES
28	92780–06020	.SCREW, FLAT HEAD .TORNILLO CABEZA PLANA		4				
29	98780–05018	.SCREW, FLAT HEAD .TORNILLO CABEZA PLANA		4				
30	EL8–48244–00	.SPRING, FREE ACCEL. .RESORTE ACELERADOR LIBRE		2				
31	EL8–48245–00	.PLATE, LOCK .PLACA CERRADURA		2				
32	704–48222–P0	.GRIP, CONTROL LEVER .MANGO DE PALANCA CONTROL		2				
33	704–82594–00	.CLAMP .GRAMPA		1				
34	704–82563–51	.TRIM & TILT SWITCH ASSY .INTERRUPTOR DE INCLINACION		1				
35	704–48229–P1	.GRIP, CONTROL LEVER .MANGO DE PALANCA CONTROL 2		1				
36	92990–05300	.WASHER, INTERNAL TOOTH .ARANDELA PLANA		6				
37	95380–06600	.NUT, HEXAGON .TUERCA		4				
38	701–48248–00	.ROLLER, FREE ACCEL. .RODILLO ACELERADOR LIBRE		2				
39	704–48238–00	.SPRING, DETENT .RESORTE		10				
40	704–48232–P1	.GEAR .ENGRANAJE 1		2				
41	EL8–48164–00	.PIN 2 .PASADOR 2		2				
42	704–48242–10	.SHAFT, DRIVE .EJE, PROPULSION		2				
43	6X3–48225–20	.COVER .CUBIERTA		2				
44	704–48192–00	.WASHER 2 .RONDANA 2		2				
45	97890–06018	.SCREW, PAN HEAD .TORNILLO		4				
46	92990–06300	.WASHER, INTERNAL TOOTH .ARANDELA PLANA		4				
47	EL8–48279–00	.CIRCLIP 2 .SEGURO2		2				
48	704–48234–00	.BUSHING 1 .BUJE		2				
49	704–48219–P0	.COVER, LEAD .CUBIERTA		2				
50	704–48144–20	.PLATE, STOPPER 2 .PLACA, RETEN 2		2				
51	704–48176–10	.GROMMET .TOPON		1				
52	704–48192–P0	.WASHER 2 .RONDANA 2		2				
53	704–48233–00	.GEAR 2 .ENGRANAJE 2		2				
54	704–48235–00	.BUSHING .BUJE		2				

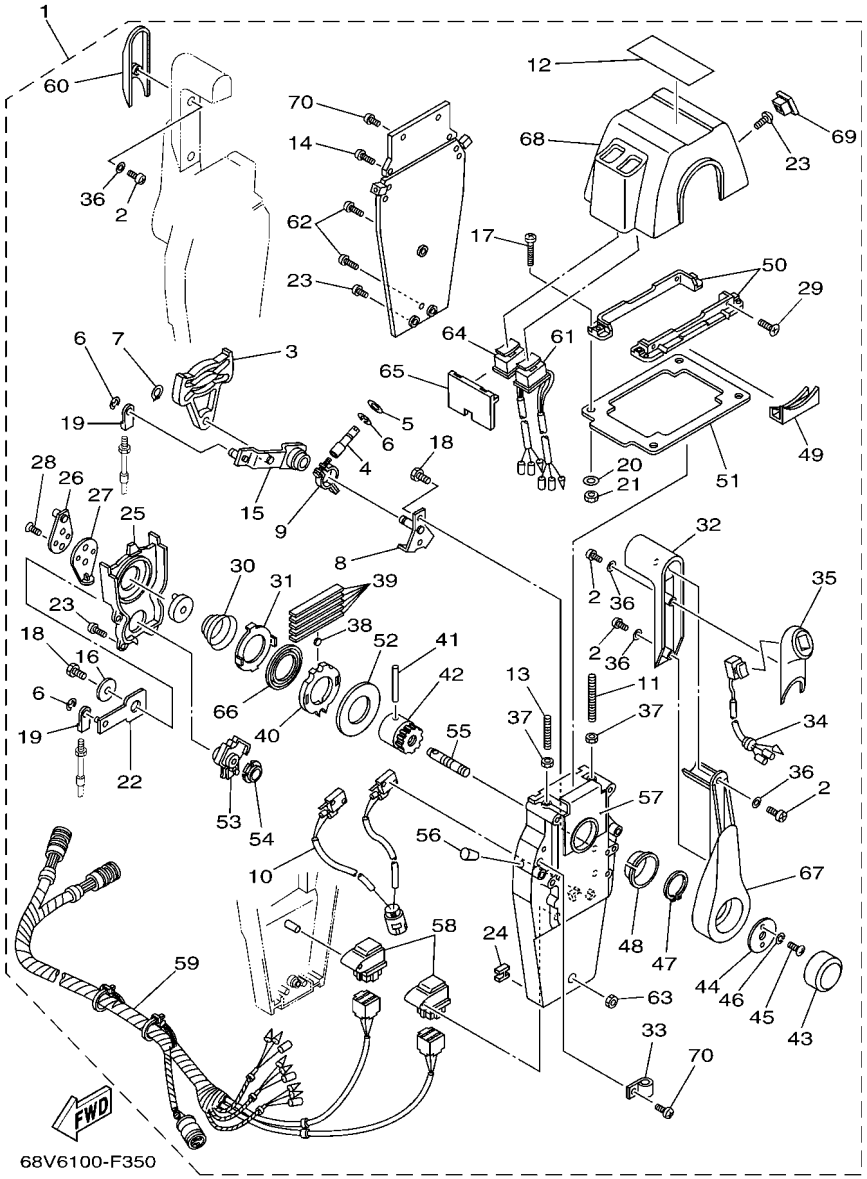

FIG. 37 REMOTE CONTROL ASSY 3 — CONTROL REMOTO COMPL 3

REF. NO.	PART NO. CODIGO Nº	DESCRIPTION DESCRIPCION	63PE	64PE				REMARKS OBSERVACIONES
55	704–48153–00	.SHAFT, FREE ACCEL. .EJE		2				
56	704–48166–00	.PLUG .TAPON		2				
57	704–48284–P0	.GROMMET .TAPON		2				
58	704–81950–10	.RELAY ASSY .RELE COMPLETO		2				
59	704–82590–10	.WIRE HARNESS ASSY .CONJUNTO DE CABLES		1				
60	704–48229–R0	.GRIP, CONTROL LEVER .MANGO DE PALANCA CONTROL 2		1				
61	704–82563–H1	.TRIM & TILT SWITCH ASSY .INTERRUPTOR DE INCLINACION		1				
62	704–48128–00	.SCREW 2 .TORNILLO 2		3				
63	704–48156–00	.NUT 1 .TUERCA 1		1				
64	704–82563–J1	.TRIM & TILT SWITCH ASSY .INTERRUPTOR DE INCLINACION		1				
65	704–48285–10	.GROMMET 2 .TAPON 2		1				
66	704–48178–00	.PLATE, SHIFT .PLACA		2				
67	704–48221–P0	.LEVER, CONTROL .PALANCA CONTROL		2				
68	704–48119–41	.COVER .CUBIERTA		1				
69	704–48167–11	.PLUG .TAPON AGUJERO		1				
70	97890–05016	.SCREW, PAN HEAD .TORNILLO		5				

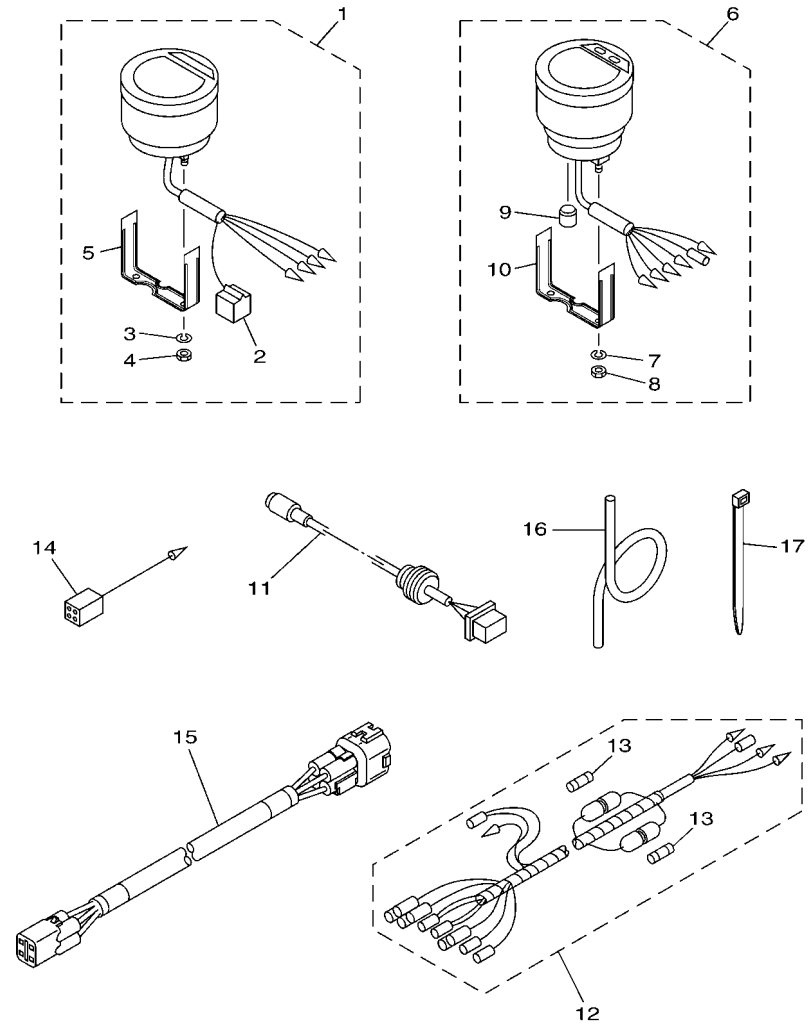

FIG. 38 METER 1 — MEDIDOR 1

REF. NO.	PART NO. CODIGO Nº	DESCRIPTION DESCRIPCION	63PE	64PE				REMARKS OBSERVACIONES
1	6Y5–8350T–91	DIGITAL TACHOMETER ASSY TACOMETRO DIGGITAL COMPLETO	1					AP FOR BRA AP FOR BRA
2	9E450–04533	.CONNECTOR .CONECTOR	1					F-4-W F-4-W
3	92990–04100	.WASHER, SPRING .ARANDELA PLANA	2					
4	95380–04600	.NUT .TUERCA	2					
5	6Y5–8355X–T1	.BRACKET, METER 1 .SOSTEN	1					
6	6Y5–83570–S6	SPEEDOMETER ASSY VELOCIMETRO COMPLETO	1					AP FOR BRA AP FOR BRA
7	92990–04100	.WASHER, SPRING .ARANDELA PLANA	2					
8	95380–04600	.NUT .TUERCA	2					
9	6Y5–83533–T2	.GROMMET .ANILLO PROTECTOR	1					
10	6Y5–8355X–T1	.BRACKET, METER 1 .SOSTEN	1					
11	6Y5–87122–S0	CORD ASSY 1 CABLE COMPLETA 1	1					AP FOR BRA AP FOR BRA
12	6Y5–83553–M0	WIRE, LEAD (L=2.5M) CABLE CONDUCTOR (L=2.5M)	1					AP FOR BRA AP FOR BRA
13	1E6–82151–00	.FUSE (10A) .FUSIBLE (10A)	2					
14	6Y5–82117–00	WIRE, LEAD (BLACK) (L300) CABLE, CONDUCTOR (NEGRO)	1					AP FOR BRA AP FOR BRA
15	6Y5–83653–30	WIRE, LEAD (L=8.0M) CABLE CONDUCTOR (L=8.0M)	1					AP FOR BRA 4P,8M AP FOR BRA 4P,8M
16	6Y5–83557–10	TUBE (8M) TUBO (8M)	1					AP FOR BRA AP FOR BRA
17	90465–11M10	CLAMP BRIDA	2					AP FOR BRA AP FOR BRA

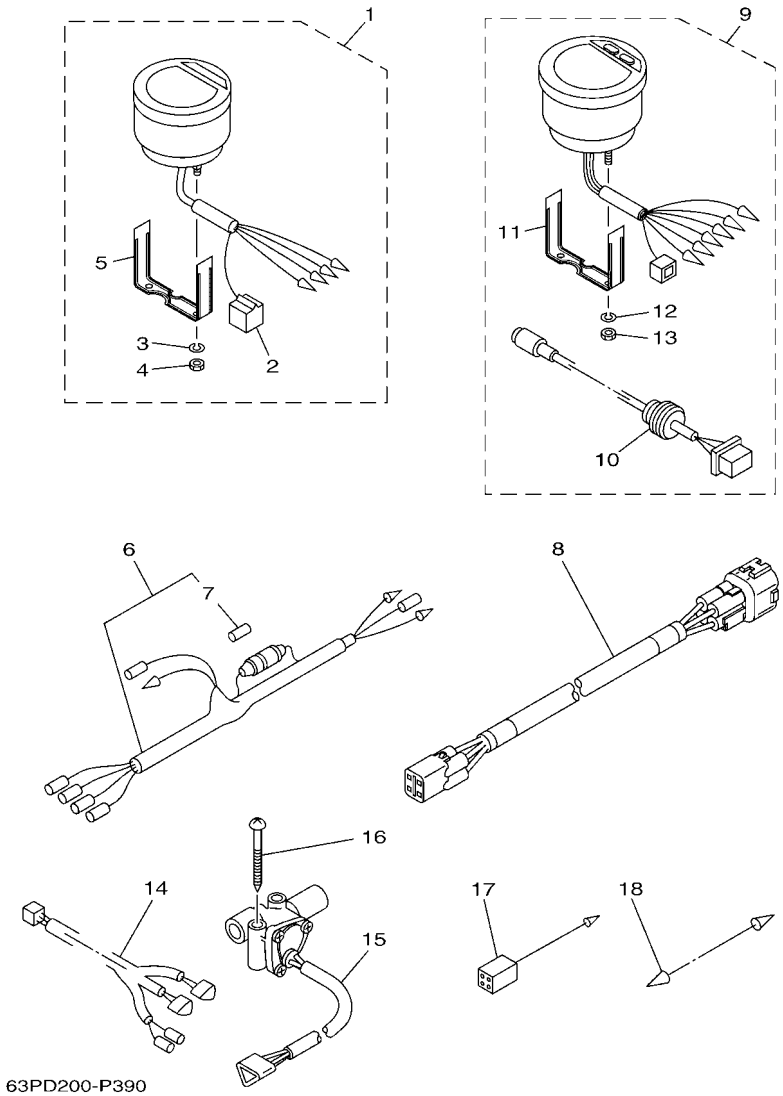

FIG. 39 METER 2 — MEDIDOR 2

REF. NO.	PART NO. CODIGO Nº	DESCRIPTION DESCRIPCION	63PE	64PE				REMARKS OBSERVACIONES
1	6Y5–8350T–91	DIGITAL TACHOMETER ASSY TACOMETRO DIGGITAL COMPLETO		1				AP FOR BRA AP FOR BRA
2	9E450–04533	.CONNECTOR .CONECTOR		1				F-4-W F-4-W
3	92990–04100	.WASHER, SPRING .ARANDELA PLANA		2				
4	95380–04600	.NUT .TUERCA		2				
5	6Y5–8355X–T1	.BRACKET, METER 1 .SOSTEN		1				
6	6Y5–83553–00	WIRE, LEAD (L=2.5M) CABLE CONDUCTOR (L=2.5M)		1				AP FOR BRA AP FOR BRA
7	1E6–82151–00	.FUSE (10A) .FUSIBLE (10A)		1				
8	6Y5–83653–40	WIRE, LEAD (L=9.0M) CABLE CONDUCTOR (L=9.0M)		1				AP FOR BRA 4P,9M AP FOR BRA 4P,9M
9	6Y5–8350F–01	FUEL MANAGEMENT METER MEDIDOR DE GESTION COMBUSTIBLE		1				AP FOR BRA AP FOR BRA
10	6Y5–87122–S0	.CORD ASSY 1 .CABLE COMPLETA 1		1				
11	6Y5–8355X–T1	.BRACKET, METER 1 .SOSTEN		1				
12	92990–04100	.WASHER, SPRING .ARANDELA PLANA		2				
13	95380–04600	.NUT .TUERCA		2				
14	6Y5–83553–F1	WIRE, LEAD (L=8.0M) CABLE CONDUCTOR (L=8.0M)		1				AP FOR BRA AP FOR BRA
15	6Y5–85752–02	SENDER UNIT ASSY, FUEL METER UNIDAD TRANSM. MED. COMBUST.		2				AP FOR BRA AP FOR BRA
16	90158–06003	SCREW, WOOD TORNILLO DE MADERA		4				AP FOR BRA AP FOR BRA
17	6Y5–82117–00	WIRE, LEAD (BLACK) (L300) CABLE, CONDUCTOR (NEGRO)		1				AP FOR BRA AP FOR BRA
18	703–82531–00	WIRE, LEAD (L70) CABLE CONDUCTOR (L70)		1				AP FOR BRA AP FOR BRA

FIG. 40 SWITCH & PANEL 1 — PANEL DE INTERRUPTOR 1

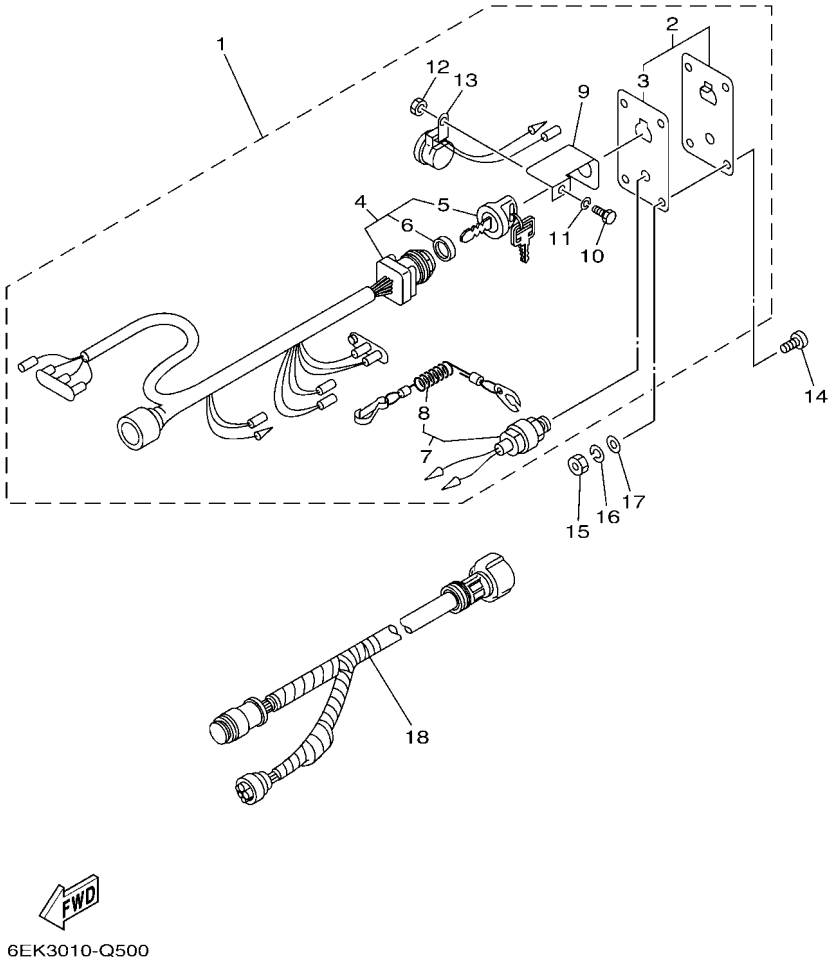

REF. NO.	PART NO. CODIGO Nº	DESCRIPTION DESCRIPCION	63PE	64PE				REMARKS OBSERVACIONES
1	6R5–82570–07	PANEL SWITCH ASSY INTERRUPTOR DE PANEL COMPL.	1					AP FOR CAR AP FOR CAR
2	704–82571–02	.PANEL, SWITCH .PANEL DE INTERRUPTOR	1					
3	6R5–82588–01	..PLATE ..PLACA	1					
4	6R5–82510–03	.MAIN SWITCH ASSY .CONJUNTO DE LLAVE IGNICION	1					
5	676–82577–01	..CAP, KEY ..TAPA	1					
6	703–82532–00	..CAP ..TAPA	1					
7	688–82575–02	.ENGINE STOP SWITCH ASSY .INTERRUPTOR DE PARADA COMPL	1					
8	682–82556–00	..LANYARD, STOP SWITCH ..CORDON DE INTERRUPTOR PARADA	1					
9	64D–82581–00	.STAY, CORD CLAMP .SOPORTE DE GRAMPA DE CABLE	1					
10	97303–05012	.BOLT .TORNILLO	1					
11	92903–05100	.WASHER, SPRING .RONDANA SENCILLA	1					
12	95303–05700	.NUT .TUERCA	1					
13	6R5–83383–00	.BUZZER .ZUMBADOR	1					
14	90149–05M05	SCREW TORNILLO DE REGLAJE	4					AP FOR CAR AP FOR CAR
15	95303–05600	NUT TUERCA	4					AP FOR CAR AP FOR CAR
16	92903–05100	WASHER, SPRING RONDANA SENCILLA	4					AP FOR CAR AP FOR CAR
17	92903–05600	WASHER, PLATE RONDANA SENCILLA	4					AP FOR CAR AP FOR CAR
18	6K1–8258A–40	EXTENSION, WIRE HARNESS (8M) EXTENSION, ARNES DE CABLES (8M	1					AP FOR CAR (10P) AP FOR CAR (10P)

FIG. 41 SWITCH & PANEL 2 — PANEL DE INTERRUPTOR 2

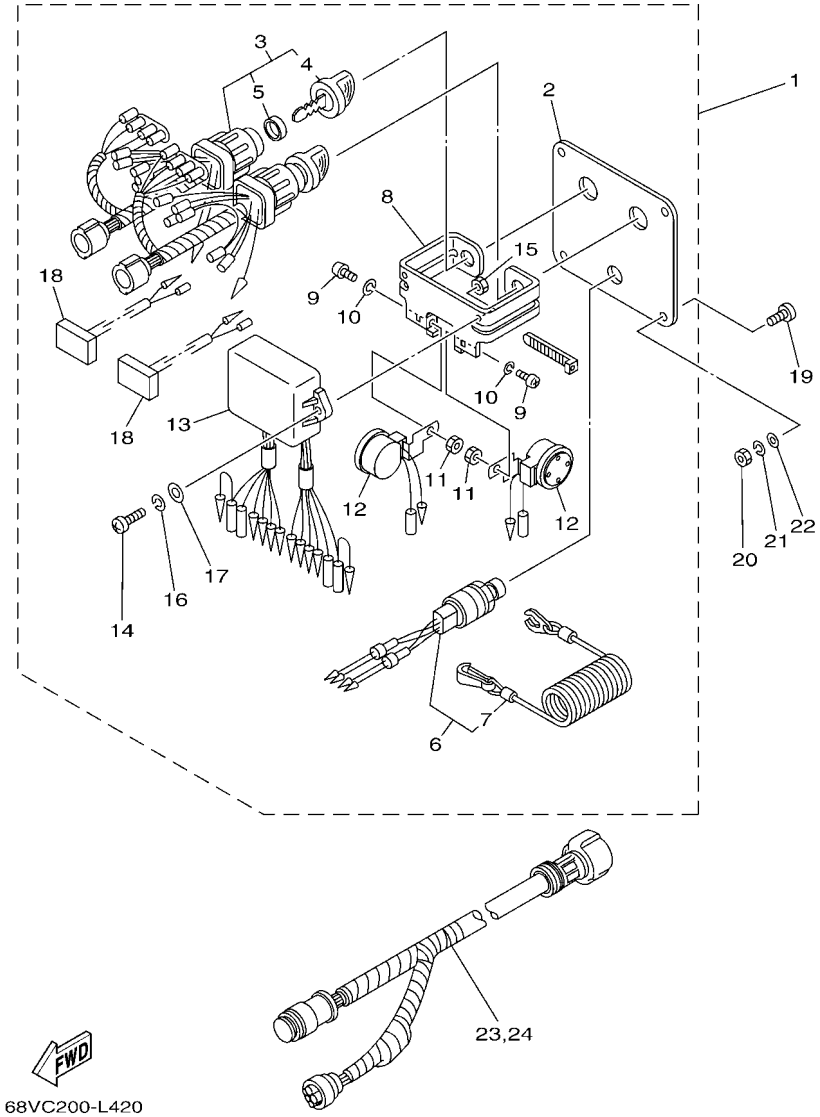

REF. NO.	PART NO. CODIGO Nº	DESCRIPTION DESCRIPCION	63PE	64PE				REMARKS OBSERVACIONES
1	6K1–82570–13	PANEL SWITCH ASSY INTERRUPTOR DE PANEL COMPL.		1				AP FOR BRA AP FOR BRA
2	6K1–82571–02	.PLATE, PANEL SWITCH .PANEL DE INTERRUPTOR		1				
3	6K1–82510–07	.MAIN SWITCH ASSY .CONJUNTO DE LLAVE IGNICION		2				
4	703–82577–00	..CAP, KEY ..TAPA		1				
5	6K1–82532–00	..CAP ..TAPA		1				
6	6K1–82575–01	.ENGINE STOP SWITCH ASSY .INTERRUPTOR DE PARADA COMPL		1				
7	682–82556–00	..LANYARD, STOP SWITCH ..CORDON DE INTERRUPTOR PARADA		1				
8	6K1–83614–01	.BRACKET .SOPORTE		1				
9	98980–05010	.SCREW, BIND .TORNILLO DE LIGAR		2				
10	92990–05100	.WASHER, SPRING .ARANDELA PLANA		2				
11	95380–05600	.NUT .TUERCA		2				
12	688–83383–12	.BUZZER .ZUMBADOR		2				
13	6K1–85830–02	.CONTROL UNIT ASSY .UNIDAD CONTROL		1				
14	98980–06020	.SCREW, BIND .TORNILLO DE LIGAR		2				
15	95380–06600	.NUT, HEXAGON .TUERCA		2				
16	92990–06100	.WASHER, SPRING .ARANDELA PLANA		2				
17	92990–06600	.WASHER, PLATE .ARANDELA PLANA		2				
18	6K1–81980–00	.DIODE ASSY .CONJUNTO DIODO		2				
19	90149–05M05	SCREW TORNILLO DE REGLAJE		4				AP FOR BRA AP FOR BRA
20	95380–05600	NUT TUERCA		4				AP FOR BRA AP FOR BRA
21	92990–05100	WASHER, SPRING ARANDELA PLANA		4				AP FOR BRA AP FOR BRA
22	92990–05600	WASHER, PLATE ARANDELA PLANA		4				AP FOR BRA AP FOR BRA
23	6K1–8258A–40	EXTENSION, WIRE HARNESS (8M) EXTENSION, ARNES DE CABLES (8M		1				AP FOR BRA (10P) AP FOR BRA (10P)
24	61B–8258A–01	EXTENSION, WIRE HARNESS (9.5M) EXTENSION, ARNES DE CABLES(9.5		1				AP FOR BRA (10P) AP FOR BRA (10P)

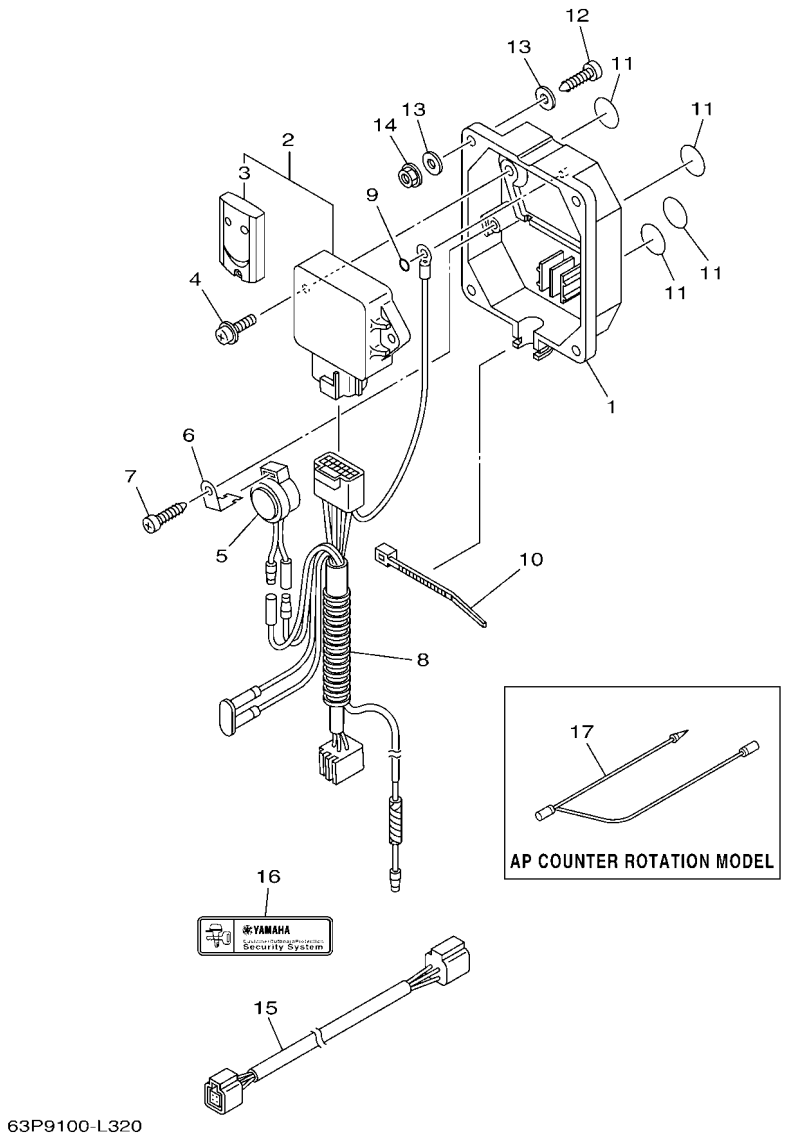

FIG. 42 OPTIONAL PARTS 1 — PARTES OPCIONALES 1

REF. NO.	PART NO. CODIGO Nº	DESCRIPTION DESCRIPCION	63PE	64PE				REMARKS OBSERVACIONES
1	6Y8–86267–00	CASE COMPLETE 1 CAJA COMPLETA 1	1					FOR CAR FOR CAR
2	6Y8–86260–12	REMOTE CONTROL UNIT ASSY UNIDAD DE CONTROL REMOTO COMPL	1					FOR CAR FOR CAR
3	6AA–86261–22	.XMTR. COMP. .XMTR. COMP.	2					
4	97980–06216	SCREW, WITH WASHER TORNILLO, CON ARANDELA	2					FOR CAR FOR CAR
5	6X4–83383–00	BUZZER ZUMBADOR	1					FOR CAR FOR CAR
6	6X4–83386–00	STAY, BUZZER TIRANTE DE ZUMBADOR	1					FOR CAR FOR CAR
7	97780–60620	SCREW, TAPPING TORNILLO DE CABEZA DE CONO ACH	1					FOR CAR FOR CAR
8	6Y8–82509–10	WIRE, SUB LEAD CABLE SUBCONDUCTOR	1					FOR CAR FOR CAR
9	93210–04279	O-RING ANILLO O	1					FOR CAR FOR CAR
10	90465–11M10	CLAMP BRIDA	1					FOR CAR FOR CAR
11	6Y8–8454G–00	PATCH 1 PARCHE 1	4					FOR CAR FOR CAR
12	90167–06M00	SCREW, TAPPING TORNILLO DE ROSCA HEMBRA	4					UR FOR CAR UR FOR CAR
	97880–06035	SCREW, PAN HEAD TORNILLO DE CABEZA CON PLANA	4					UR FOR CAR UR FOR CAR
13	90201–06M30	WASHER, PLATE ARANDELA PLANA	8					FOR CAR FOR CAR
14	95780–06300	NUT, FLANGE TUERCA	4					FOR CAR FOR CAR
15	6Y8–82521–11	2FT PIGTAIL BUS CABLE CONDUCTOR	1					FOR CAR FOR CAR
16	6Y8–48277–00	STICKER 1 ETIQUETTE 1	4					FOR CAR FOR CAR
17	6H5–81315–00	LEAD WIRE ASSY CABLE CONDUCTOR COMPLETO		1				FOR CAR FOR CAR

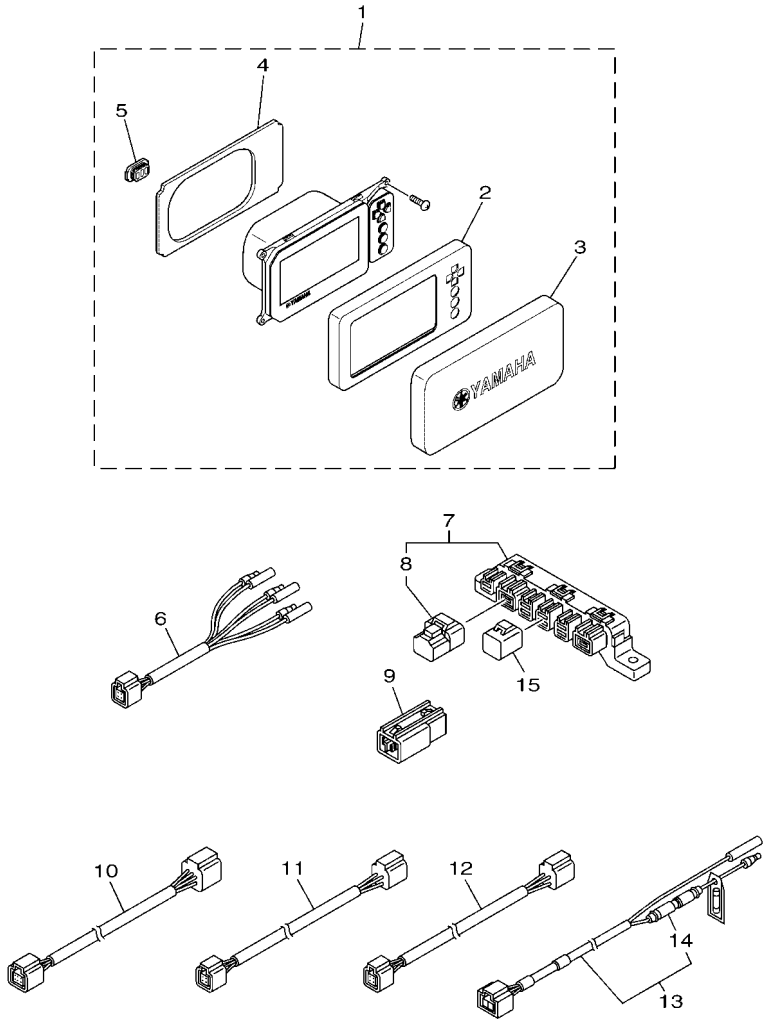

63PD370-P340

FIG. 43 OPTIONAL PARTS 2 — PARTES OPCIONALES 2

REF. NO.	PART NO. CODIGO Nº	DESCRIPTION DESCRIPCION	63PE	64PE				REMARKS OBSERVACIONES
1	6YC–83710–00	MULTI DISPLAY ASSY METRO DE INDICACION PLURAL	1					FOR CAR,CSA FOR CAR,CSA
2	6YC–83512–00	.RING, SPEED METER .ANILLO	1					
3	6YC–87278–00	.COVER, METER .CUBIERTA DE MEDIDOR	1					
4	6YC–12223–00	.SEAL .SELLO	1					
5	6YC–82532–00	.CAP .TAPA	1					
6	6Y8–8356N–01	LEAD, FUEL TANK & GPS SENDER CABLE CONDUCTOR	1					FOR CAR,CSA FOR CAR,CSA
7	6Y8–81920–01	MULTI HUB ASSY TERMINAL COMPLETO	1					FOR CAR,CSA FOR CAR,CSA
8	6Y8–85371–01	.END OF LINE RESISTER .RESISTOR	1					
9	6Y8–81920–11	IN-LINE HUB ASSY TERMINAL COMPLETO	1					FOR CAR,CSA FOR CAR,CSA
10	6Y8–82553–31	25FT MAIN BUS CABLE	1					FOR CAR,CSA FOR CAR,CSA
11	6Y8–82521–11	2FT PIGTAIL BUS CABLE CONDUCTOR	1					FOR CAR,CSA FOR CAR,CSA
12	6Y8–82521–51	12FT PIGTAIL BUS CABLE CONDUCTOR	1					FOR CAR,CSA FOR CAR,CSA
13	6Y8–83553–01	8FT POWER WIRE CABLE CONDUCTOR	1					FOR CAR,CSA FOR CAR,CSA
14	6G1–82151–00	.FUSE (10A) .FUSIBLE (10A)	1					
15	6Y8–82582–11	CAP 1 (4PIN) CUBIERTA DE ARNES DE CABLE	2					FOR CAR,CSA FOR CAR,CSA

FIG. 44 OPTIONAL PARTS 3 — PARTES OPCIONALES 3

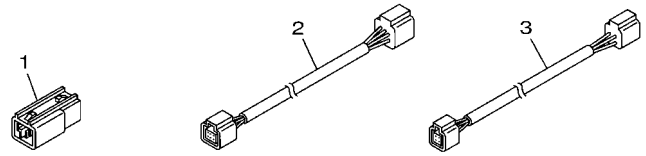

63PD200-P440

REF. NO.	PART NO. CODIGO Nº	DESCRIPTION DESCRIPCION	63PE	64PE				REMARKS OBSERVACIONES
1	6Y8–81920–11	IN-LINE HUB ASSY TERMINAL COMPLETO		1				FOR CAR FOR CAR
2	6Y8–82553–21	20FT MAIN BUS CABLE		1				FOR CAR FOR CAR
3	6Y8–82521–51	12FT PIGTAIL BUS CABLE CONDUCTOR		1				FOR CAR FOR CAR

FIG. 45 OPTIONAL PARTS 4 — PARTES OPCIONALES 4

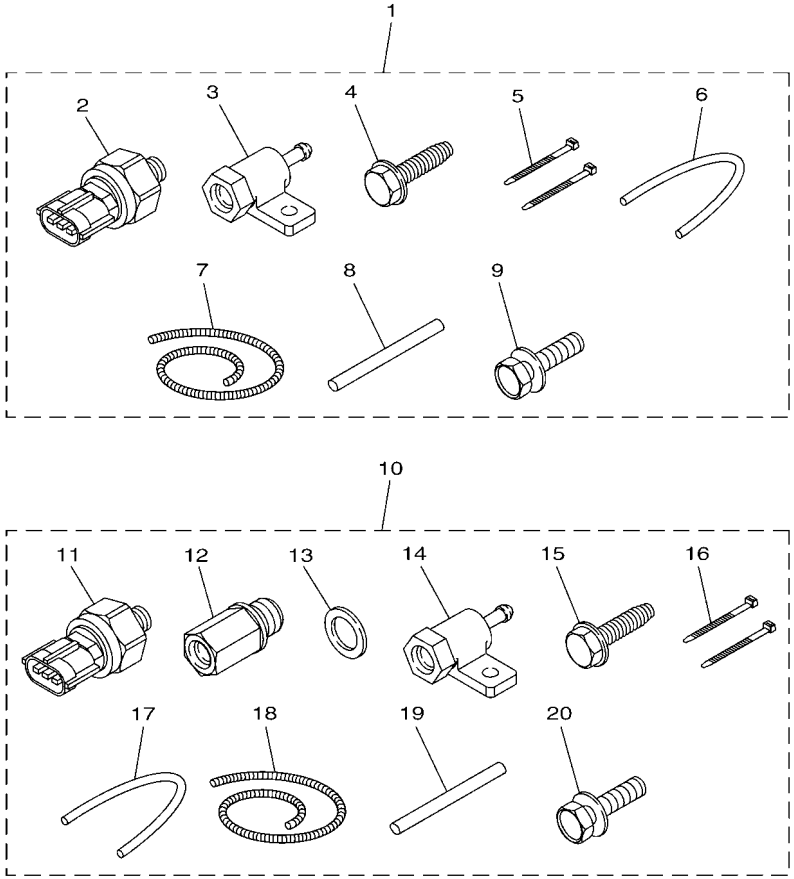

63PD370-P350

REF. NO.	PART NO. CODIGO Nº	DESCRIPTION DESCRIPCION	63PE	64PE				REMARKS OBSERVACIONES
1	60V–8A4L1–14	SENSOR, MODULE 1 SENSOR COMP. 1	1					FOR CSA FOR CSA
2	6AW–8366B–01	.SENSOR, WATER PRESSURE .SENSOR DE PRESION AGUA	1					
3	60V–8366D–00	.ADAPTOR, INPUT .CONECTOR BANJO 3	1					
4	90109–06M81	.BOLT .PERNO	1					
5	90465–11M10	.CLAMP .BRIDA	2					
6	90445–07017	.HOSE (L: 550MM) .TUBO (L: 550MM)	1					
7	90447–07013	.HOSE, COVER (L: 700MM) .MANGUERA DE CUBIERTA (L:700MM)	1					
8	60V–42629–00	.SEAL .SELLO 2	1					
9	97595–06516	.BOLT, WITH WASHER .PERNO CON ARANDELA	1					
10	63P–8A4L2–03	SENSOR, MODULE 2 SENSOR COMP. 2	1					FOR CAR FOR CAR
11	6AW–8366B–01	.SENSOR, WATER PRESSURE .SENSOR DE PRESION AGUA	2					
12	63P–8366C–00	.ADAPTOR, INPUT .CONECTOR BANJO 2	1					
13	90430–14115	.GASKET .JUNTA	1					
14	60V–8366D–00	.ADAPTOR, INPUT .CONECTOR BANJO 3	1					
15	90109–06M81	.BOLT .PERNO	1					
16	90465–11M10	.CLAMP .BRIDA	2					
17	90445–07017	.HOSE (L: 550MM) .TUBO (L: 550MM)	1					
18	90447–07013	.HOSE, COVER (L: 700MM) .MANGUERA DE CUBIERTA (L:700MM)	1					
19	60V–42629–00	.SEAL .SELLO 2	1					
20	97595–06516	.BOLT, WITH WASHER .PERNO CON ARANDELA	1					

FIG. 46 OPTIONAL PARTS 5 — PARTES OPCIONLES 5

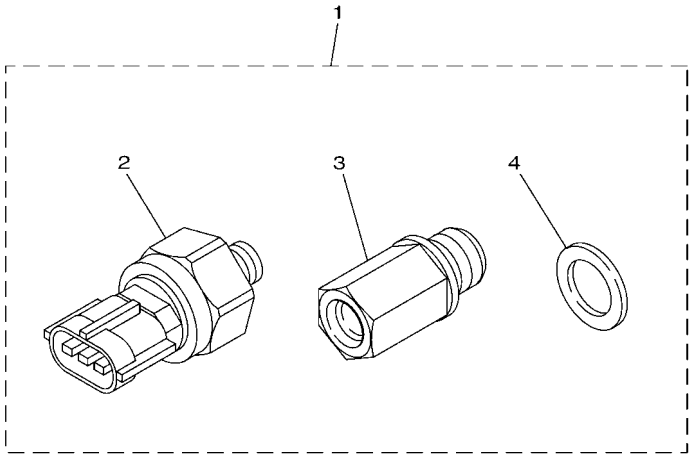

6P2B300-N410

REF. NO.	PART NO. CODIGO Nº	DESCRIPTION DESCRIPCION	63PE	64PE				REMARKS OBSERVACIONES
1	63P–8A4L0–10	SENSOR, MODULE SENSOR COMP.		1				FOR CAR FOR CAR
2	6AW–8366B–01	.SENSOR, WATER PRESSURE .SENSOR DE PRESION AGUA		1				
3	63P–8366C–00	.ADAPTOR, INPUT .CONECTOR BANJO 2		1				
4	90430–14115	.GASKET .JUNTA		1				

FIG. 47 OPTIONAL PARTS 6 — PARTES OPCIONALES 6

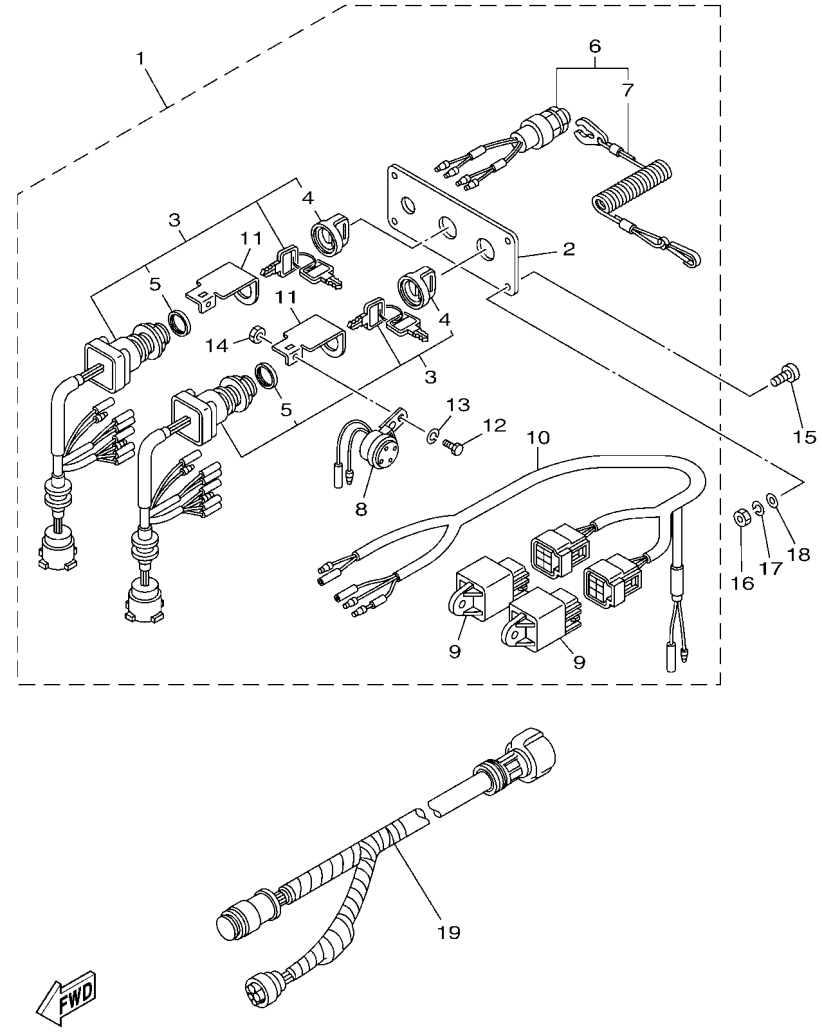

REF. NO.	PART NO. CODIGO Nº	DESCRIPTION DESCRIPCION	63PE	64PE				REMARKS OBSERVACIONES
1	6Y8–82570–04	PANEL SWITCH ASSY INTERRUPTOR DE PANEL COMPL.		1				FOR CAR FOR CAR
2	6Y8–82571–01	.PLATE, PANEL SWITCH .PANEL DE INTERRUPTOR		1				
3	6Y8–82510–03	.MAIN SWITCH ASSY .CONJUNTO DE LLAVE IGNICION		2				
4	676–82577–01	..CAP, KEY ..TAPA		1				
5	703–82532–00	..CAP ..TAPA		1				
6	6K1–82575–01	.ENGINE STOP SWITCH ASSY .INTERRUPTOR DE PARADA COMPL		1				
7	682–82556–00	..LANYARD, STOP SWITCH ..CORDON DE INTERRUPTOR PARADA		1				
8	6R5–83383–00	.BUZZER .ZUMBADOR		2				
9	68V–81950–00	.RELAY ASSY .RELE COMPLETO		2				
10	6Y8–82507–00	.LEAD, IGNITION SWITCH RELAY .CABLE CONDUCTOR		1				
11	64D–82581–00	.STAY, CORD CLAMP .SOPORTE DE GRAMPA DE CABLE		2				
12	97003–05012	.BOLT .PERNO		2				
13	92903–05100	.WASHER, SPRING .RONDANA SENCILLA		2				
14	95303–05700	.NUT .TUERCA		2				
15	90149–05M05	SCREW TORNILLO DE REGLAJE		4				FOR CAR FOR CAR
16	95380–05600	NUT TUERCA		4				FOR CAR FOR CAR
17	92990–05100	WASHER, SPRING ARANDELA PLANA		4				FOR CAR FOR CAR
18	92990–05600	WASHER, PLATE ARANDELA PLANA		4				FOR CAR FOR CAR
19	61B–8258A–01	EXTENSION, WIRE HARNESS (9.5M) EXTENSION, ARNES DE CABLES(9.5		1				FOR CAR (10P) FOR CAR (10P)

FIG. 48 REPAIR KIT 1 — ESTUCHE REPARATION 1

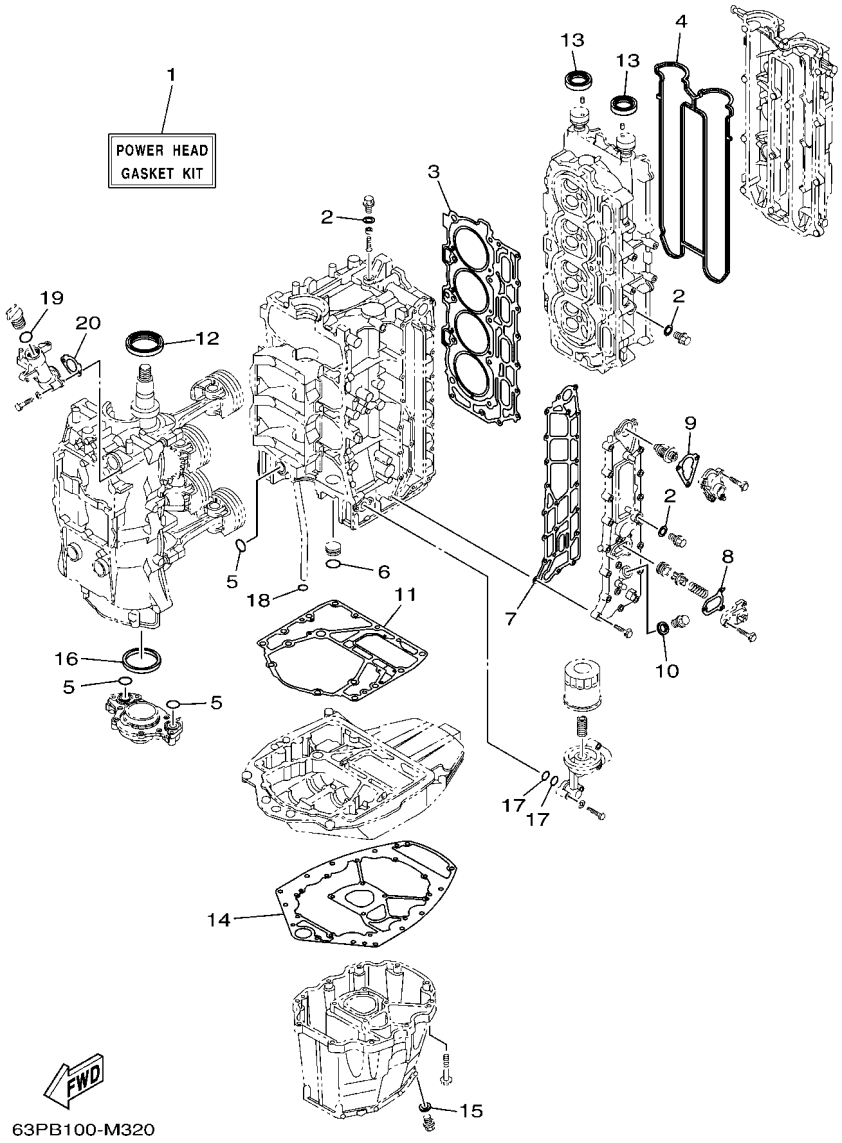

REF. NO.	PART NO. CODIGO Nº	DESCRIPTION DESCRIPCION	63PE	64PE				REMARKS OBSERVACIONES
1	63P–W0001–04	POWER HEAD GASKET KIT JUEGO DE EMPAQUE DE MOTOR	1	1				
2	90430–14115	.GASKET .JUNTA	4	4				
3	63P–11181–00	.GASKET, CYLINDER HEAD 1 .JUNTA, DE CULATA 1	1	1				
4	63P–11193–00	.GASKET, HEAD COVER 1 .EMPAQUE	1	1				
5	93210–25552	.O-RING .ANILLO O	3	3				
6	93210–25647	.O-RING .ANILLO O	1	1				
7	63P–41114–A2	.GASKET, EXHAUST OUTER COVER .EMPAQUE	1	1				
8	67F–12435–A0	.GASKET .EMPAQUE	1	1				
9	63P–12414–00	.GASKET, COVER .EMPAQUE	1	1				
10	90201–186F1	.WASHER, PLATE .ARANDELA PLANA	1	1				
11	63P–11351–03	.GASKET, CYLINDER .JUNTA, DE CILINDRO	1	1				
12	93102–60004	.OIL SEAL .SELLO ACEITE	1	1				
13	93102–38008	.OIL SEAL .SELLO ACEITE	2	2				
14	63P–15312–01	.GASKET, OIL PAN .EMPAQ BANDEJA DE ACEITE	1	1				
15	90430–14M09	.GASKET .JUNTA	1	1				
16	69J–11355–00	.SEAL, CYLINDER 1 .RETEN ACEITE CILINDRO 1	1	1				
17	93210–19MJ1	.O-RING .ANILLO O	2	2				
18	93210–19MJ3	.O-RING .ANILLO O	1	1				
19	93210–24M79	.O-RING .ANILLO O	1	1				
20	63P–15364–A0	.GASKET, OIL PLUG .EMPAQUE TAPON DE ACEITE	1	1				

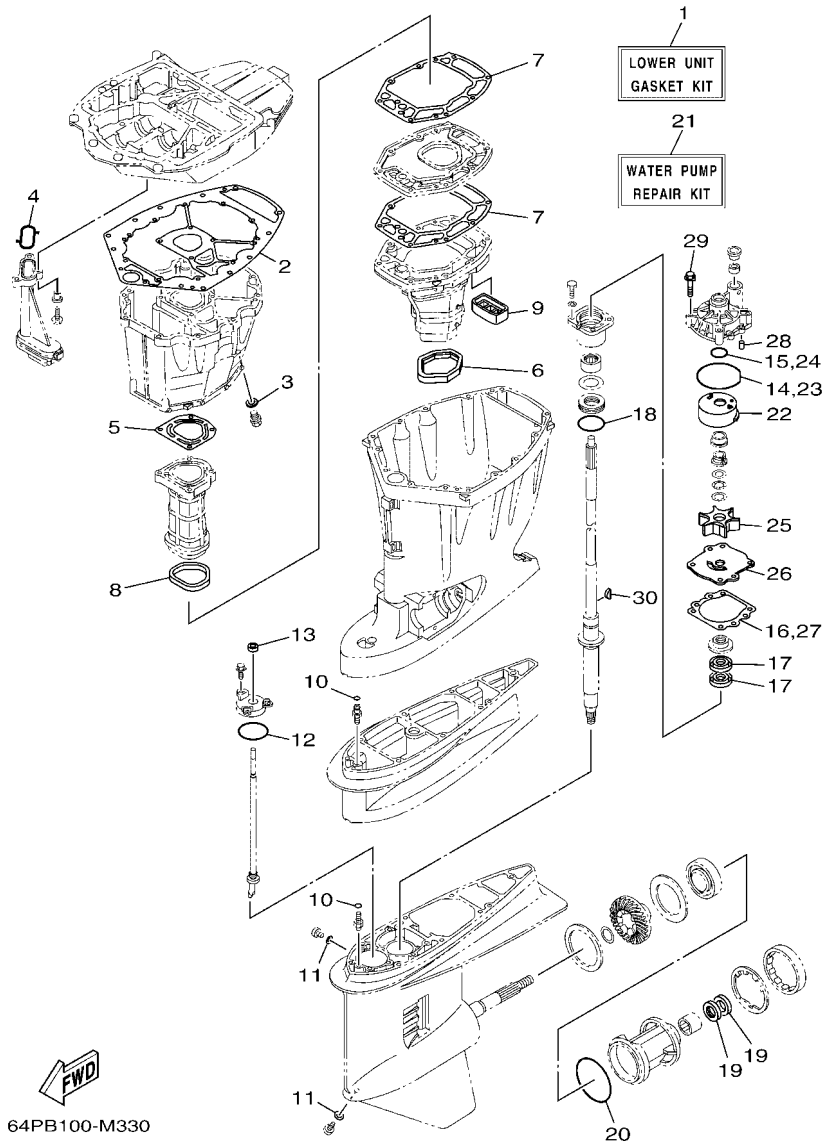

FIG. 49 REPAIR KIT 2 — ESTUCHE REPARATION 2

REF. NO.	PART NO. CODIGO Nº	DESCRIPTION DESCRIPCION	63PE	64PE				REMARKS OBSERVACIONES
1	63P–W0001–21	LOWER UNIT GASKET KIT JUEGO DE EMPAQUE UNIDAD INFER.	1	1				
2	63P–15312–01	.GASKET, OIL PAN .EMPAQ BANDEJA DE ACEITE	1	1				
3	90430–14M09	.GASKET .JUNTA	1	1				
4	63P–13415–00	.SEAL, OIL STRAINER .SELLO COLADOR ACEITE	1	1				
5	63P–41133–A0	.GASKET, EXHAUST MANIFOLD 1 .EMPAQUE ESCAPE MULTIPLE	1	1				
6	69J–45123–00	.GASKET, MUFFLER .EMPAQUE SILENCIADOR	1	1				
7	63P–41134–A1	.GASKET, EXHAUST MANIFOLD .EMPAQUE	2	2				
8	63P–41138–00	.SEAL, EXT. 1 .SELLO, ESCAPE 1	1	1				
9	69J–45127–00	.SEAL .SELLO DE GOMA	1	1				
10	93210–07003	.O-RING .ANILLO O	2	2				
11	90430–08003	.GASKET .JUNTA	2	2				
12	93210–58144	.O-RING .ANILLO O	1	1				
13	93106–09014	.OIL SEAL .SELLO ACEITE	1	1				
14	93210–86M38	.O-RING .ANILLO O	1	1				
15	93210–37160	.O-RING .ANILLO O	1	1				
16	6E5–44315–A0	.GASKET, WATER PUMP .EMPAQUE	1	1				
17	93101–28M16	.OIL SEAL .SELLO ACEITE	2	2				
18	93210–55M14	.O-RING .ANILLO O	1	1				
19	93101–30M17	.OIL SEAL .SELLO ACEITE	2	2				
20	93210–97M55	.O-RING .ANILLO O	1	1				
21	61A–W0078–A3	WATER PUMP REPAIR KIT ESTUCHE REPARACION BOMBA AGUA	1	1				
22	61A–44322–02	.INSERT, CARTRIDGE .CARTUCHO	1	1				
23	93210–86M38	.O-RING .ANILLO O	1	1				
24	93210–37160	.O-RING .ANILLO O	1	1				
25	6E5–44352–01	.IMPELLER .IMPULSOR	1	1				
26	6G5–44323–01	.OUTER PLATE, CARTRIDGE .PLACA EXTERIOR DEL CARTUCHO	1	1				
27	6E5–44315–A0	.GASKET, WATER PUMP .EMPAQUE	1	1				

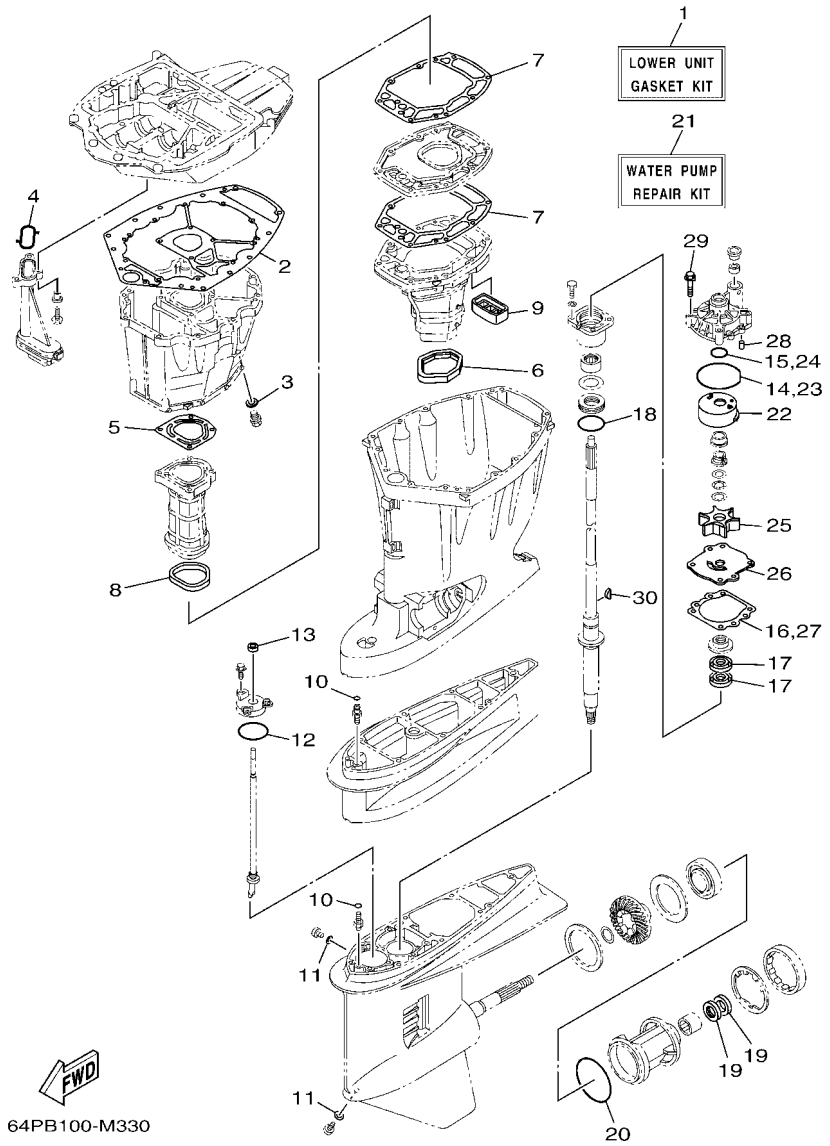

FIG. 49 REPAIR KIT 2 — ESTUCHE REPARATION 2

REF. NO.	PART NO. CODIGO Nº	DESCRIPTION DESCRIPCION	63PE	64PE				REMARKS OBSERVACIONES
28	93606–12019	.PIN, DOWEL .PASADOR DE CLAVIJA	2	2				
29	90119–08M14	.BOLT, WITH WASHER .TORNILLO CON ARANDELA	4	4				
30	90280–04M05	.KEY, WOODRUFF .CUNA WOODRUFF	1	1				

NUMERICAL INDEX
INDICE NUMERICO

PART NO. CODIGO Nº	REF. NO.
63P–11110–11–9S	5 – 2
63P–11119–00	3 – 22
63P–11119–10	3 – 23
6DA–11133–10	5 – 3
63P–11135–00	5 – 21
63P–11181–00	5 – 16
	48 – 3
63P–11191–00–9S	5 – 20
63P–11192–01	5 – 26
63P–11193–00	5 – 24
	48 – 4
63P–11197–A0	3 – 10
69J–11301–00	5 – 10
	6 – 12
68T–11325–00	1 – 6
	6 – 2
63P–11325–01	1 – 3
	3 – 20
67F–11325–01	1 – 4
	1 – 7
	5 – 11
	6 – 13
63P–11325–11	1 – 2
	3 – 14
63P–11325–21	1 – 1
	3 – 11
67F–11328–00	5 – 12
	6 – 14
63P–11351–03	3 – 25
	48 – 11
69J–11355–00	28 – 16
	48 – 16
63P–11372–00	3 – 4
63P–11377–10	3 – 30
63P–11410–04	4 – 1
63P–11416–31	4 – 4
63P–11416–41	4 – 4
63P–11416–51	4 – 4
63P–11417–41	4 – 5
63P–11417–51	4 – 5
63P–11417–61	4 – 5
63P–11417–71	4 – 5
63P–11417–81	4 – 5
63P–11426–31	4 – 6
63P–11426–41	4 – 6
63P–11426–51	4 – 6
6CB–11478–00	4 – 2
63P–11500–04	3 – 26

PART NO. CODIGO Nº	REF. NO.
63P–11512–00	3 – 29
63P–11536–01	7 – 20
63P–11537–00	7 – 12
63P–11590–10	7 – 16
63P–11603–01	4 – 11
63P–11604–00	4 – 11
63P–11631–10–93	4 – 10
63P–11633–10	4 – 12
63P–11634–00	4 – 13
63P–11635–10	4 – 10
63P–11654–10	4 – 8
63P–11656–30	4 – 9
63P–11656–40	4 – 9
63P–11656–50	4 – 9
63P–12111–00	7 – 1
6CB–12113–00	7 – 4
51Y–12119–00	7 – 7
63P–12121–00	7 – 2
63P–12171–10	7 – 9
63P–12181–10	7 – 10
6YC–12223–00	43 – 4
63P–1240H–01–9S	6 – 20
67F–12411–01	1 – 8
	6 – 18
67F–12412–00	6 – 19
63P–12414–00	1 – 9
	6 – 21
	48 – 9
6G5–12416–00	6 – 6
67F–12435–A0	6 – 10
	48 – 8
63P–1243A–00	6 – 25
67F–1246A–A0–9S	6 – 9
6AW–12572–00	21 – 11
6R3–12581–00	21 – 12
6R3–12582–00	21 – 13
6R3–12583–00	21 – 14
6S5–12858–00	6 – 30
6AW–13119–00	28 – 14
63P–1312A–01	10 – 25
63P–13131–00	13 – 22
63P–13160–10	12 – 6
63P–13300–02	28 – 12
63P–13329–00	28 – 13
63P–13411–00	28 – 8
63P–13415–00	28 – 10
	49 – 4
63P–13437–62	15 – 26

PART NO. CODIGO Nº	REF. NO.
69J–13440–03	1 – 10
	6 – 29
69J–13440–03	6 – 31
63P–13490–00	3 – 34
63P–13532–10	12 – 5
63P–13545–00	12 – 4
63P–13546–00	12 – 3
8FP–13556–00	10 – 24
63P–13557–00	10 – 19
63P–13564–00	8 – 17
63P–13573–00	11 – 27
68V–13577–00	12 – 14
6BM–13593–00	11 – 24
69J–13631–00	28 – 15
63P–13641–10	10 – 12
63P–13643–00	10 – 21
63P–13645–00	10 – 15
63P–13716–00	11 – 23
63P–13751–20	10 – 2
63P–13751–30	10 – 2
6P2–13758–00	12 – 17
63P–13761–01	10 – 22
68V–13766–00	10 – 24
68V–13781–20	11 – 13
63P–13784–00	11 – 18
63P–13784–10	11 – 18
63P–13882–00	11 – 28
63P–13906–00	11 – 9
63P–13907–03	11 – 17
63P–13907–12	11 – 17
63P–13915–00	1 – 12
	11 – 19
63P–13971–10	12 – 2
63P–13974–40	12 – 7
63P–13975–40	12 – 16
63P–13975–50	12 – 16
63P–13976–40	12 – 8
63P–13976–50	12 – 8
63P–14148–00	11 – 20
63P–14149–00	12 – 1
68V–1416A–00	10 – 23
63P–14180–20	11 – 1
63P–14180–30	11 – 1
63P–14181–20	11 – 6
63P–14181–30	11 – 6
63P–14182–20	11 – 2
63P–14182–30	11 – 2
63P–14191–00	11 – 7

PART NO. CODIGO Nº	REF. NO.
63P–14200–60	10 – 1
63P–14200–70	10 – 1
63P–14200–90	10 – 1
63P–14291–00	10 – 11
63P–14292–00	10 – 29
69J–14321–00	10 – 3
68V–14323–00	10 – 5
68V–14331–00	10 – 4
68V–14356–00	10 – 9
68V–14386–00	11 – 15
63P–14435–00	18 – 14
63P–14440–00	8 – 10
6P2–14446–00	10 – 20
63P–14449–00	8 – 11
63P–14457–00	8 – 12
63P–14496–00	10 – 13
63P–14546–00	11 – 14
63P–14546–10	11 – 14
63P–14565–00	11 – 10
68V–14565–00	10 – 10
63P–14567–00	11 – 11
69J–14624–01	27 – 25
63P–14711–01–9S	27 – 12
63P–14984–00	1 – 11
	11 – 12
63P–14984–10	1 – 11
	11 – 12
63P–14985–00	11 – 16
63P–15311–02–CA	28 – 2
63P–15312–01	28 – 1
	48 – 14
	49 – 2
63P–15316–00	28 – 5
63P–15319–00–9S	6 – 36
63P–15362–10	28 – 20
6G8–15363–00	6 – 34
63P–15364–A0	6 – 37
	48 – 20
63P–15373–00	8 – 5
63P–15377–10	28 – 21
63P–15378–00	8 – 8
63P–2134X–00	9 – 2
63P–21841–00	11 – 26
63P–2247B–10	12 – 11
68V–2411M–00	12 – 9
63P–2411R–00	11 – 4
63P–2411T–00	11 – 5
68V–24149–00	13 – 30

PART NO. CODIGO Nº	REF. NO.
6P2–24170–00	9 – 1
63P–2419A–01	9 – 3
6AW–24300–00	12 – 21
6Y2–24307–50	14 – 1
64P–24311–10	9 – 11
63P–24311–20	13 – 17
63P–24311–30	13 – 17
64P–24312–00	9 – 10
63P–24312–10	13 – 34
63P–24312–20	13 – 34
64P–24313–00	9 – 8
63P–24313–10	13 – 35
63P–24313–20	13 – 35
63P–24314–00	13 – 32
63P–24314–10	13 – 32
64P–24314–10	9 – 18
63P–24315–00	13 – 33
64P–24315–00	9 – 13
63P–24315–10	13 – 33
64P–24316–10	9 – 14
63P–24316–30	13 – 4
63P–24316–40	13 – 4
63P–24317–30	12 – 10
63P–24317–40	12 – 10
63P–24325–40	12 – 13
63P–24325–50	12 – 13
6E5–24351–51	13 – 3
	14 – 3
6Y2–24360–60	14 – 5
6YK–24360–73	14 – 6
63P–24364–01	9 – 20
63P–24367–01	9 – 12
68V–24374–00	13 – 25
6AW–24377–01	13 – 2
6E5–24378–00	13 – 31
69J–24379–00	11 – 21
6E5–24379–00	9 – 22
63P–24410–20	13 – 19
68V–24411–00	13 – 24
68V–24412–00	13 – 20
63P–24413–00	13 – 26
63P–24414–00	13 – 28
63P–24423–00	13 – 23
68V–24444–00	13 – 29
4SV–24453–00	11 – 3
	11 – 8
69J–24453–00	11 – 3
	11 – 8

PART NO. CODIGO Nº	REF. NO.
68V–24454–00	13 – 21
6P3–24469–00	13 – 8
68V–24471–10	13 – 27
69J–24501–10	1 – 13
	12 – 15
69J–24502–00	9 – 9
63P–24519–00	12 – 22
68V–24519–00	12 – 12
6P3–24519–00	13 – 9
6P3–24560–03	13 – 5
6P3–24562–03	13 – 7
6P3–24563–01	1 – 14
	13 – 6
6P3–24564–00	1 – 15
	13 – 10
63P–24566–00	13 – 11
68V–2481H–00	12 – 18
67F–28100–01	13 – 40
67F–2812A–00	17 – 32
63P–41113–04–9S	6 – 1
63P–41114–A2	6 – 4
	48 – 7
63P–41131–01–9S	27 – 9
63P–41133–A0	27 – 10
	49 – 5
63P–41134–A1	27 – 16
	49 – 7
63P–41137–04–CA	27 – 1
63P–41138–00	27 – 18
	49 – 8
63P–41213–00	22 – 42
63P–41237–00	22 – 48
6H4–41237–00	10 – 16
682–41238–01	10 – 18
63P–42154–10	22 – 37
63P–42157–00	22 – 49
68V–42171–00	22 – 50
6BG–42384–00	21 – 9
6DA–42384–00	20 – 24
6DA–42510–10–8D	24 – 8
63P–42541–10	21 – 15
63P–42610–70	2 – 1
6DA–42613–00	2 – 3
63P–42615–10	20 – 6
6DA–42617–00	15 – 25
63P–4261A–10	2 – 2
6CB–42628–00	2 – 15
60V–42629–00	45 – 8

NUMERICAL INDEX
INDICE NUMERICO

PART NO. CODIGO Nº	REF. NO.
60V–42629–00	45 – 19
6CB–42647–A0	2 – 5
6AW–42663–00	2 – 11
6DA–42675–00	2 – 17
6DA–42676–00	2 – 18
63P–42677–60	2 – 19
63P–42678–60	2 – 16
63P–42681–20	2 – 20
6DA–42697–00	2 – 14
63P–42710–10–8D	20 – 1
648–42715–00	22 – 28
63P–42716–00	20 – 7
6DA–42717–00	20 – 23
69J–42723–01	18 – 17
6E5–42724–00	27 – 7
6DA–42725–00	20 – 2
6H1–42726–21	21 – 8
61A–42727–00	20 – 27
6DA–42741–10–8D	21 – 1
6H4–42748–00	20 – 25
68F–42753–00	20 – 28
63P–42756–00	21 – 18
6CB–42761–00	20 – 4
6DA–42769–00	27 – 8
6EE–42794–40	20 – 30
6EE–42794–50	20 – 31
6AH–42794–70	20 – 30
63P–42815–10–8D	20 – 8
6DA–42816–01–8D	20 – 9
6DA–42817–01–8D	20 – 10
6CB–42818–00	20 – 14
6CB–42819–00	20 – 15
64E–43111–02–8D	23 – 1
64E–43112–02–8D	23 – 7
64E–43126–10	23 – 37
64E–43131–01	23 – 12
64E–43139–10	24 – 1
66T–43144–00	20 – 18
6G5–43144–00	23 – 27
6E5–43145–01	33 – 8
6G5–43148–00	23 – 32
6G5–43181–02	23 – 29
6G5–43185–02	23 – 30
64E–43311–10–8D	23 – 23
63P–43338–10	25 – 58
61A–43376–00	24 – 6
63P–43800–13	25 – 1
63P–43801–10	25 – 4

PART NO. CODIGO Nº	REF. NO.
63P–43802–10	25 – 38
6EK–43804–11	26 – 3
6EK–43805–00	26 – 2
6EK–4380F–00	26 – 6
63P–4380L–13	25 – 2
63P–4380P–10	25 – 9
63P–43810–10	25 – 3
63P–43811–10	25 – 6
63P–43814–10	25 – 13
6CJ–43816–00	25 – 59
63P–43816–10	25 – 17
6BC–43818–00	23 – 21
63P–4381J–10	25 – 60
63P–43820–10	25 – 25
63P–43821–10	25 – 24
6H1–43822–10	25 – 22
63P–43828–10	25 – 28
63P–43829–10	25 – 20
63P–4382A–10	25 – 31
63P–43830–10	25 – 43
69J–43831–00	25 – 65
6H1–43841–11	25 – 37
63P–43843–10	25 – 48
6CJ–43844–00	25 – 53
6H1–43844–10	25 – 47
63P–43845–10	25 – 34
63P–43847–10	25 – 29
63P–4384G–10	25 – 67
6H1–4384G–11	25 – 45
63P–4384H–10	25 – 32
63P–43851–10	25 – 51
63P–43854–10	25 – 30
69J–43855–00	25 – 50
6H1–43856–10	25 – 46
63P–43857–10	25 – 73
63P–4385H–10	25 – 66
6H1–43861–00	25 – 7
6H1–43862–00	25 – 10
	25 – 14
63P–43862–10	25 – 23
63P–43863–10	25 – 8
6H1–43866–01	25 – 40
65W–4386A–00	25 – 72
688–4386F–00	25 – 74
62X–4386K–00	26 – 7
62X–43871–00	25 – 26
62Y–43871–00	25 – 61
6H1–43875–00	25 – 36

PART NO. CODIGO Nº	REF. NO.
63P–43875–10	25 – 21
63P–43876–10	25 – 16
63P–43876–10	25 – 70
63P–43879–10	26 – 8
63P–43880–21	26 – 1
63P–43881–21	26 – 10
6EK–43882–00	26 – 11
63P–4388H–10	25 – 68
6EK–43892–00	26 – 4
69J–43899–01	25 – 62
63P–43899–10	25 – 69
69J–4389J–00	25 – 33
63P–44117–01	22 – 8
63P–44118–00	22 – 23
6DA–44120–11	22 – 18
6DA–44121–00	22 – 16
63P–44122–00	22 – 13
69J–44135–00	22 – 43
63P–44150–01	29 – 18
63P–44150–11	29 – 18
64P–44150–11	31 – 19
6DA–44176–00	22 – 7
703–44189–20	35 – 36
703–44189–30	35 – 42
6X3–44191–00	35 – 47
61A–44311–01	29 – 24
	31 – 25
6E5–44312–00	29 – 29
	30 – 5
	31 – 30
	32 – 5
6E5–44315–A0	29 – 33
	31 – 34
	49 – 16
	49 – 27
61A–44322–02	29 – 25
	31 – 26
	49 – 22
6G5–44323–01	29 – 32
	31 – 33
	49 – 26
6E5–44352–01	29 – 30
	31 – 31
	49 – 25
63P–44361–00	30 – 1
	32 – 1
63P–44362–00	30 – 3
	32 – 3

PART NO. CODIGO Nº	REF. NO.
63P–44363–00	30 – 6
	32 – 6
6E5–44365–00	29 – 28
	30 – 2
	30 – 4
	31 – 29
	32 – 2
	32 – 4
6E5–44366–00	27 – 27
6P2–44391–00	20 – 26
63P–44511–00	24 – 36
6DA–44514–00	24 – 28
6DA–44526–00	24 – 32
6G5–44526–00	23 – 3
6DA–44532–00	24 – 33
69J–44533–00	24 – 22
68V–44551–00–8D	24 – 13
63P–44553–00–8D	24 – 25
60V–44555–00	24 – 16
63P–44555–00	24 – 16
63P–44556–00–8D	24 – 26
61A–44575–00	24 – 15
63P–45111–00–8D	27 – 20
69J–45123–00	27 – 13
	49 – 6
69J–45127–00	27 – 19
	49 – 9
6C5–45155–00	27 – 28
63P–45181–01–9S	27 – 17
63P–45211–00–8D	27 – 34
6J9–45214–00	30 – 12
	32 – 12
6J9–45215–00	30 – 13
	32 – 13
6G5–45251–02	1 – 16
	23 – 2
63P–45300–04–8D	29 – 1
64P–45300–13–8D	31 – 1
63P–45300–14–8D	29 – 1
6J9–45301–07–8D	29 – 2
	31 – 2
6E5–45318–00	27 – 23
6E5–45321–00	29 – 14
	31 – 15
6E5–45331–00–9S	29 – 36
	31 – 37
6J9–45332–00–CA	29 – 58
6K1–45332–01–CA	31 – 59

PART NO. CODIGO Nº	REF. NO.
688–45341–10	29 – 7
	31 – 8
6E5–45344–00	29 – 42
	31 – 43
6J9–45371–01	1 – 19
	30 – 16
6K1–45371–02	1 – 19
	32 – 16
688–45375–00	29 – 11
	31 – 12
663–45376–00	29 – 10
	31 – 11
63P–45378–00	27 – 35
	29 – 12
	31 – 13
63P–45379–00	27 – 32
6G5–45383–01	29 – 68
	31 – 70
6G5–45384–02	29 – 69
	31 – 71
63P–45501–01	29 – 45
63P–45501–11	29 – 45
	31 – 46
61A–45527–00	29 – 23
	31 – 24
6G5–45536–01	29 – 9
	31 – 10
61A–45538–00	29 – 20
	31 – 21
63P–45551–00	29 – 46
	31 – 47
6EH–45560–00	29 – 48
64P–45560–10	31 – 49
6G5–45567–01	29 – 5
	31 – 6
6G5–45567–10	29 – 5
	31 – 6
6G5–45567–20	29 – 5
	31 – 6
6G5–45567–30	29 – 5
	31 – 6
6G5–45567–40	29 – 5
	31 – 6
6G5–45567–50	29 – 5
	31 – 6
6G5–45567–60	29 – 5
	31 – 6
64P–45570–10	31 – 61

PART NO. CODIGO Nº	REF. NO.
6EH–45571–00	29 – 60
6K1–45576–00	31 – 62
6G5–45576–10	29 – 61
6G5–45577–02	29 – 65
	31 – 68
6G5–45577–10	29 – 65
	31 – 68
6G5–45577–20	29 – 65
	31 – 68
6G5–45577–30	29 – 65
	31 – 68
6G5–45577–40	29 – 65
	31 – 68
6G5–45577–50	29 – 65
	31 – 68
6G5–45577–60	29 – 65
	31 – 68
6K1–45578–01	31 – 64
6K1–45578–10	31 – 64
6K1–45578–20	31 – 64
6K1–45578–30	31 – 64
6K1–45578–40	31 – 64
6K1–45578–50	31 – 64
6K1–45578–60	31 – 64
6E5–45587–01	29 – 39
	31 – 40
6E5–45587–10	29 – 39
	31 – 40
6E5–45587–20	29 – 39
	31 – 40
6E5–45587–30	29 – 39
	31 – 40
6E5–45587–40	29 – 39
	31 – 40
6E5–45587–50	29 – 39
	31 – 40
6E5–45587–60	29 – 39
	31 – 40
6J9–45611–01	29 – 49
6K1–45611–10	31 – 50
6DA–45631–00	29 – 56
	31 – 57
6E5–45633–01	29 – 57
	31 – 58
6E5–45634–02	29 – 50
	31 – 51
6G5–45930–00	30 – 25
6G5–45932–00	30 – 25

NUMERICAL INDEX
INDICE NUMERICO

PART NO. CODIGO Nº	REF. NO.
6G5–45941–00	30 – 25
6G5–45943–01	30 – 25
6K1–45945–00	32 – 25
6G5–45945–01	30 – 25
6K1–45947–00	32 – 25
6G5–45947–01	30 – 25
6G5–45949–00	30 – 25
6K1–45970–01	32 – 25
6G5–45970–02	30 – 25
68F–45970–10	30 – 23
68G–45970–10	32 – 23
6R1–45970–A1	32 – 25
6R4–45970–A1	30 – 25
66K–45970–B0	30 – 25
6K1–45972–01	32 – 25
6G5–45972–02	30 – 25
68F–45972–10	30 – 23
68G–45972–10	32 – 23
6R1–45972–A0	32 – 25
6R4–45972–A0	30 – 25
66K–45972–B0	30 – 25
6K1–45974–02	32 – 25
6G5–45974–03	30 – 25
68F–45974–10	30 – 23
68G–45974–10	32 – 23
6R1–45974–A0	32 – 25
6R4–45974–A0	30 – 25
66K–45974–B0	30 – 25
6K1–45976–00	32 – 25
6G5–45976–01	30 – 25
68F–45976–10	30 – 23
68G–45976–10	32 – 23
6J9–45976–10	30 – 25
6R1–45976–A0	32 – 25
6R4–45976–A0	30 – 25
6K1–45978–02	32 – 25
6G5–45978–03	30 – 25
68F–45978–10	30 – 23
68G–45978–10	32 – 23
6R1–45978–A0	32 – 25
6R4–45978–A0	30 – 25
63P–45987–00	30 – 18
	32 – 18
6CE–45997–00	30 – 19
	32 – 19
688–45997–01	30 – 19
	32 – 19
6CE–45C81–00	30 – 24

PART NO. CODIGO Nº	REF. NO.
6CE–45C81–00	32 – 24
63P–46241–00	7 – 15
704–48119–31	36 – 59
704–48119–41	37 – 68
EL8–48127–00	36 – 23
	37 – 23
704–48128–00	37 – 62
703–48128–10	35 – 39
703–48129–00	35 – 41
704–48129–00	36 – 2
	37 – 2
704–48144–10	36 – 50
704–48144–20	37 – 50
703–48152–10	35 – 6
703–48153–00	35 – 61
704–48153–00	36 – 55
	37 – 55
704–48156–00	37 – 63
EL8–48164–00	36 – 41
	37 – 41
704–48166–00	36 – 56
	37 – 56
704–48167–01	36 – 61
704–48167–11	37 – 69
704–48176–00	36 – 51
704–48176–10	37 – 51
704–48178–00	37 – 66
704–48178–10	36 – 60
703–48189–00	35 – 19
EL8–48191–00	36 – 16
	37 – 16
704–48192–00	36 – 44
	37 – 44
704–48192–P0	36 – 52
	37 – 52
703–48198–00	35 – 16
704–48205–P1	34 – 2
	36 – 1
703–48207–21	34 – 1
	35 – 1
704–48207–P1	34 – 3
	37 – 1
703–48211–10	35 – 25
703–48212–10	35 – 26
703–48213–10	35 – 27
703–48215–10	35 – 46
704–48215–21	36 – 12
704–48215–30	37 – 12

PART NO. CODIGO Nº	REF. NO.
703–48219–10	35 – 34
704–48219–P0	36 – 49
	37 – 49
703–48221–10	35 – 28
704–48221–P0	36 – 58
	37 – 67
703–48222–20	35 – 31
704–48222–P0	36 – 32
	37 – 32
703–48223–10	35 – 32
703–48225–10	35 – 33
6X3–48225–20	36 – 43
	37 – 43
703–48227–00	35 – 30
704–48229–P1	36 – 35
	37 – 35
704–48229–R0	37 – 60
704–48231–00	36 – 25
	37 – 25
703–48232–00	35 – 2
704–48232–P1	36 – 40
	37 – 40
704–48233–00	36 – 53
	37 – 53
703–48234–00	35 – 20
704–48234–00	36 – 48
	37 – 48
703–48235–00	35 – 5
704–48235–00	36 – 54
	37 – 54
703–48236–00	35 – 18
703–48238–00	35 – 24
704–48238–00	36 – 39
	37 – 39
EL8–48241–00	36 – 26
	37 – 26
704–48242–10	36 – 42
	37 – 42
703–48243–00	35 – 17
703–48244–00	35 – 23
EL8–48244–00	36 – 30
	37 – 30
703–48245–00	35 – 13
EL8–48245–00	36 – 31
	37 – 31
701–48246–00	36 – 5
	37 – 5
703–48246–00	35 – 29

PART NO. CODIGO Nº	REF. NO.
701–48248–00	35 – 15
	36 – 38
	37 – 38
EL8–48251–00	36 – 3
	37 – 3
703–48252–00	35 – 14
EL8–48254–00	36 – 27
	37 – 27
EL8–48259–00	36 – 7
	37 – 7
704–48261–00	36 – 15
	37 – 15
703–48261–01	35 – 4
704–48262–00	36 – 8
	37 – 8
703–48264–00	35 – 8
704–48264–00	36 – 9
	37 – 9
704–48265–00	36 – 4
	37 – 4
703–48265–10	35 – 11
703–48268–00	35 – 7
703–48271–00	35 – 3
704–48271–00	36 – 22
	37 – 22
6Y8–48277–00	42 – 16
EL8–48279–00	36 – 47
	37 – 47
703–48281–00	35 – 35
704–48281–00	36 – 13
	37 – 13
EL8–48281–00	36 – 11
	37 – 11
704–48283–00	36 – 17
	37 – 17
703–48284–10	35 – 58
704–48284–P0	36 – 57
	37 – 57
704–48285–10	37 – 65
701–48287–00	35 – 45
704–48287–00	36 – 20
	37 – 20
703–48293–10	35 – 44
701–48320–50	34 – 4
701–48320–60	34 – 4
701–48320–80	34 – 4
6E5–48344–00	22 – 5
	22 – 35

PART NO. CODIGO Nº	REF. NO.
703–48345–01	35 – 21
	36 – 19
	37 – 19
701–48350–00	34 – 4
701–48350–20	34 – 4
703–48358–00	35 – 22
	36 – 24
	37 – 24
63P–48531–10	22 – 1
6E5–48538–00	22 – 3
6E5–61301–01	33 – 10
6E5–61303–00	33 – 14
6E5–61311–11	33 – 12
6E5–61313–00	33 – 11
6E5–61315–00	33 – 13
6E5–61350–02	33 – 1
6E5–61351–01	33 – 2
6E5–61355–00	33 – 5
68V–81145–01	10 – 7
68V–81146–01	10 – 26
68V–81147–00	10 – 28
6H5–81315–00	42 – 17
63P–8132G–10	15 – 22
6P2–81332–00	15 – 15
63P–81336–00	17 – 34
63P–81337–10	15 – 17
63D–81345–20	15 – 5
63P–81410–00	15 – 4
63P–81450–00	15 – 1
63P–81460–00	15 – 2
63P–81673–01	15 – 6
6BR–81800–01	19 – 1
69J–81801–00	19 – 5
67F–81807–00	19 – 10
67F–81808–00	19 – 8
67F–81809–00	19 – 19
67F–81810–00	19 – 3
67F–81813–00	19 – 6
67F–81820–00	19 – 7
67F–81821–00	19 – 13
6K7–81826–11	19 – 24
69J–81828–00	19 – 25
68V–8182L–00	10 – 8
67F–81830–00	19 – 17
67F–81832–00	19 – 11
67F–81836–00	19 – 12
6C5–81839–00	19 – 21
67F–8183R–00	19 – 15

PART NO. CODIGO Nº	REF. NO.
60V–8183T–00	19 – 18
69J–81840–00	19 – 4
67F–81841–00	19 – 14
69J–81842–00	19 – 20
63P–81845–00	15 – 11
63P–81845–20	9 – 17
67F–81846–00	19 – 26
67F–81850–00	19 – 2
67F–81857–00	19 – 9
6C5–81869–00	19 – 23
67F–81891–00	19 – 16
63P–81919–00	17 – 35
6Y8–81920–01	43 – 7
6Y8–81920–11	43 – 9
	44 – 1
60V–81925–00	19 – 28
63P–81941–00	19 – 22
63P–81942–00	17 – 22
63P–81948–00	17 – 13
68V–8194A–00	17 – 4
63P–81950–00	17 – 9
68V–81950–00	47 – 9
704–81950–10	37 – 58
68V–81953–00	17 – 5
6AW–8195A–00	17 – 26
63P–81960–01	16 – 20
63P–81975–00	16 – 22
6K1–81980–00	41 – 18
6EE–81994–40	15 – 27
6EE–81994–50	15 – 28
6AH–81994–70	15 – 27
6AH–81996–00	20 – 32
6DA–82105–01	18 – 28
6Y5–82117–00	38 – 14
	39 – 17
6G5–82119–00	17 – 8
6E5–82148–00	23 – 5
	23 – 8
66K–82149–00	23 – 26
1E6–82151–00	38 – 13
	39 – 7
63P–82151–00	17 – 25
67F–82151–00	17 – 27
6G1–82151–00	43 – 14
67F–82151–10	17 – 28
63P–82170–02	17 – 24
68F–82176–00	17 – 33
6EK–82181–00	26 – 5

NUMERICAL INDEX
INDICE NUMERICO

PART NO. CODIGO Nº	REF. NO.
63P–82310–01	16 – 1
63P–82314–00	16 – 17
6A0–82317–00	15 – 18
63P–82341–00	16 – 2
63P–82342–00	16 – 3
63P–82343–00	16 – 7
63P–82344–01	16 – 8
67F–82361–00	16 – 4
	16 – 10
67F–82362–00	16 – 5
	16 – 9
63P–82380–00	10 – 27
63P–82388–00	16 – 15
6Y8–82507–00	47 – 10
6Y8–82509–10	42 – 8
6R5–82510–03	40 – 4
6Y8–82510–03	47 – 3
6K1–82510–07	41 – 3
703–82510–44	35 – 48
6Y8–82521–11	42 – 15
	43 – 11
6Y8–82521–51	43 – 12
	44 – 3
703–82531–00	35 – 51
	39 – 18
6K1–82532–00	35 – 50
	41 – 5
6YC–82532–00	43 – 5
703–82532–00	40 – 6
	47 – 5
703–82540–00	35 – 55
704–82540–20	36 – 10
704–82540–30	37 – 10
6Y8–82553–21	44 – 2
6Y8–82553–31	43 – 10
682–82556–00	35 – 53
	40 – 8
	41 – 7
	47 – 7
6P2–82560–01	18 – 21
69J–82563–01	18 – 16
703–82563–20	35 – 57
704–82563–41	36 – 34
704–82563–51	37 – 34
704–82563–H1	37 – 61
704–82563–J1	37 – 64
6Y8–82570–04	47 – 1
6R5–82570–07	40 – 1

PART NO. CODIGO Nº	REF. NO.
6K1–82570–13	41 – 1
6Y8–82571–01	47 – 2
6K1–82571–02	41 – 2
704–82571–02	40 – 2
6K1–82575–01	41 – 6
	47 – 6
688–82575–02	35 – 52
	40 – 7
703–82577–00	35 – 49
	41 – 4
676–82577–01	40 – 5
	47 – 4
64D–82581–00	40 – 9
	47 – 11
68F–82582–00	19 – 29
6DA–82582–00	18 – 2
6DA–82582–10	18 – 3
6Y8–82582–11	18 – 4
	43 – 15
69J–82587–00	18 – 18
63P–82588–00	3 – 35
6E9–82588–00	18 – 22
61A–82588–01	22 – 10
6R5–82588–01	40 – 3
61B–8258A–01	41 – 24
	47 – 19
688–8258A–10	18 – 31
688–8258A–20	35 – 54
6K1–8258A–40	40 – 18
	41 – 23
704–82590–10	37 – 59
63P–82590–91	18 – 1
703–82591–00	35 – 59
703–82592–00	35 – 60
704–82594–00	36 – 33
	37 – 33
60V–8259F–00	22 – 31
69J–8259F–00	22 – 9
63P–8259L–00	11 – 25
63P–8259M–00	18 – 7
68F–82846–00	17 – 29
6R5–83383–00	40 – 13
	47 – 8
6X4–83383–00	42 – 5
703–83383–11	35 – 56
688–83383–12	41 – 12
6X4–83386–00	42 – 6
6Y5–8350F–01	39 – 9

PART NO. CODIGO Nº	REF. NO.
6Y5–8350T–91	38 – 1
	39 – 1
6Y5–8350T–91	43 – 2
6Y5–83533–T2	38 – 9
6Y5–83553–00	39 – 6
6Y8–83553–01	43 – 13
6Y5–83553–F1	39 – 14
6Y5–83553–M0	38 – 12
6Y5–83557–10	38 – 16
6E5–83558–00	27 – 29
6Y5–8355X–T1	38 – 5
	38 – 10
	39 – 5
	39 – 11
6Y8–8356N–01	43 – 6
6Y5–83570–S6	38 – 6
63P–83614–01	18 – 19
6K1–83614–01	41 – 8
63P–83626–00	5 – 28
6AW–83651–00	18 – 15
6Y5–83653–30	38 – 15
6Y5–83653–40	39 – 8
6AW–8366B–01	45 – 2
	45 – 11
	46 – 2
63P–8366C–00	45 – 12
	46 – 3
60V–8366D–00	45 – 3
	45 – 14
63P–8366G–00	21 – 21
63P–8366P–01	18 – 24
67H–83672–01	24 – 3
6YC–83710–00	43 – 1
6Y8–8454G–00	42 – 11
68F–85119–00	17 – 16
6Y8–85371–01	43 – 8
68F–85516–01	17 – 14
60V–85544–00	17 – 31
689–85547–00	13 – 1
68V–85548–01	17 – 20
63P–85580–00	15 – 3
6Y5–85752–02	39 – 15
61A–85790–00	18 – 11
6K1–85830–02	41 – 13
6S1–85885–00	10 – 6
63P–85886–00	18 – 13
63P–8591A–38	17 – 1
63P–8591A–75	17 – 1

PART NO. CODIGO Nº	REF. NO.
6C5–86120–00	9 – 15
6Y8–86260–12	42 – 2
6AA–86261–22	42 – 3
6Y8–86267–00	42 – 1
6Y5–87122–S0	38 – 11
	39 – 10
6YC–87278–00	43 – 3
63P–8A4L0–10	46 – 1
60V–8A4L1–14	45 – 1
63P–8A4L2–03	45 – 10
K0F–A3741–00	7 – 5
K0F–A3742–00	7 – 6
K0F–A3743–00	7 – 3
K0F–A3751–00	7 – 8
K0F–A3751–10	7 – 8
K0F–A3751–20	7 – 8
K0F–A3751–30	7 – 8
K0F–A3751–40	7 – 8
K0F–A3751–50	7 – 8
K0F–A3751–60	7 – 8
K0F–A3751–70	7 – 8
K0F–A3751–80	7 – 8
K0F–A3751–90	7 – 8
K0F–A3751–A0	7 – 8
K0F–A3751–B0	7 – 8
K0F–A3751–C0	7 – 8
K0F–A3751–D0	7 – 8
K0F–A3751–E0	7 – 8
K0F–A3751–F0	7 – 8
K0F–A3751–G0	7 – 8
K0F–A3751–H0	7 – 8
K0F–A3751–J0	7 – 8
K0F–A3751–K0	7 – 8
K0F–A3751–L0	7 – 8
K0F–A3751–M0	7 – 8
K0F–A3751–N0	7 – 8
K0F–A3751–P0	7 – 8
K0F–A3751–R0	7 – 8
K0F–A3751–S0	7 – 8
K0F–A3751–T0	7 – 8
K0F–A3753–00	7 – 8
K0F–A3753–10	7 – 8
K0F–A3753–20	7 – 8
K0F–A3753–30	7 – 8
K0F–A3753–40	7 – 8
K0F–A3753–50	7 – 8
K0F–A3753–60	7 – 8
K0F–A3753–70	7 – 8

PART NO. CODIGO Nº	REF. NO.
63P–W0001–04	48 – 1
63P–W0001–21	49 – 1
61A–W0078–A3	1 – 20
	49 – 21
63P–W009A–04–9S	5 – 1
63P–W009B–12–9S	3 – 1
63P–W1165–10	4 – 7
63P–W1510–04–9S	3 – 2
90101–09M70	33 – 18
90101–12047	23 – 41
90101–12M05	23 – 41
	23 – 41
90105–06M07	5 – 13
	6 – 15
90105–10071	3 – 9
90105–10M00	30 – 17
	32 – 17
90105–14009	24 – 30
90109–06M80	18 – 23
90109–06M81	45 – 4
	45 – 15
90109–06M86	18 – 20
	20 – 5
	20 – 19
	21 – 20
	21 – 22
	21 – 26
	22 – 2
90109–08019	22 – 33
90109–14007	24 – 21
90110–05020	7 – 21
90111–08078	2 – 6
90119–06071	13 – 16
90119–06076	8 – 14
90119–06135	9 – 25
	13 – 39
90119–06269	11 – 22
90119–06M09	16 – 6
90119–06M10	29 – 17
	31 – 18
90119–06M18	27 – 33
90119–06M81	3 – 18
90119–06M82	8 – 16
90119–06M83	13 – 38
90119–06MA2	3 – 24
	6 – 11
90119–06MA4	6 – 5
	6 – 22

PART NO. CODIGO Nº	REF. NO.
90119–06MA4	16 – 21
90119–06MA6	3 – 28
90119–07234	5 – 7
90119–07235	5 – 6
90119–08102	27 – 2
90119–08M14	29 – 35
	31 – 36
	49 – 29
90119–08M22	20 – 22
90119–08M58	27 – 5
90119–08M66	3 – 19
	3 – 27
90119–08M91	5 – 19
90119–10007	27 – 21
90119–10008	30 – 11
	32 – 11
90119–10024	24 – 29
90119–10050	7 – 13
90119–10M07	7 – 17
90119–10MA2	30 – 11
90149–05M05	40 – 14
	41 – 19
	47 – 15
90151–05M05	6 – 3
90151–06M02	3 – 15
	3 – 21
90152–05M08	30 – 14
	32 – 14
90155–10006	5 – 18
90158–06003	39 – 16
90159–05059	24 – 2
90159–06053	21 – 5
90159–06M28	21 – 2
90167–05017	2 – 4
90167–06M00	42 – 12
90169–05M00	17 – 23
90170–09M05	33 – 19
90170–14M06	33 – 15
90170–16M01	29 – 47
	31 – 48
90171–18M04	30 – 21
	32 – 21
90179–08003	19 – 27
90179–24002	15 – 14
90183–061A6	21 – 4
90185–05002	30 – 15
	32 – 15
90185–09M01	33 – 6

NUMERICAL INDEX
INDICE NUMERICO

PART NO. CODIGO Nº	REF. NO.
90185–09M01	33 – 20
90185–14M00	24 – 34
90185–22M11	23 – 17
90201–06M30	42 – 13
90201–06M31	22 – 38
	22 – 44
	22 – 51
90201–10060	23 – 19
90201–10M20	33 – 7
90201–10M76	33 – 17
90201–12426	23 – 43
90201–13M01	23 – 42
90201–156J2	20 – 12
90201–15M58	24 – 20
90201–16M01	24 – 31
90201–16M55	24 – 19
90201–186F1	6 – 24
	48 – 10
90201–22M01	29 – 21
	31 – 22
90201–24014	15 – 13
90201–26M59	23 – 16
90201–30M92	29 – 66
90201–35008	24 – 17
90201–38M60	24 – 9
90202–08M20	22 – 14
90202–16061	22 – 21
90202–32M19	24 – 18
90202–40M47	24 – 12
90206–10M04	22 – 39
	22 – 45
	22 – 52
90206–15M18	20 – 13
90206–22M19	29 – 22
	31 – 23
90249–06M19	23 – 33
90250–08M07	29 – 55
	31 – 56
90280–04M05	29 – 31
	31 – 32
	49 – 30
90280–05015	15 – 12
90282–04M00	29 – 67
	31 – 69
90338–25004	3 – 7
90340–08002	29 – 6
	31 – 7
90340–14M06	5 – 8

PART NO. CODIGO Nº	REF. NO.
90340–14M06	6 – 27
	28 – 6
90340–18M09	6 – 23
90340–27129	3 – 16
90344–51019	5 – 4
90386–06M12	22 – 17
90386–08001	8 – 13
90386–10M16	23 – 31
90386–12069	22 – 30
90386–15M73	20 – 11
90386–16M66	22 – 20
90386–22M98	23 – 22
	23 – 38
90386–25M31	23 – 15
90386–38M32	24 – 11
90387–06176	17 – 15
90387–06263	28 – 9
90387–06280	8 – 15
90387–06285	15 – 20
90387–06289	9 – 5
	13 – 14
90387–06M29	22 – 40
	22 – 53
90387–06M43	21 – 7
90387–06M82	22 – 46
90387–08M37	20 – 21
90387–08M45	2 – 9
90387–10094	2 – 7
90387–10M05	23 – 34
90387–10M61	33 – 3
90387–14004	24 – 37
90430–06M03	5 – 14
	6 – 16
90430–08003	1 – 18
	29 – 8
	31 – 9
	49 – 11
90430–14115	3 – 13
	5 – 9
	6 – 28
	45 – 13
	46 – 4
	48 – 2
90430–14M09	1 – 17
	28 – 7
	48 – 15
	49 – 3
90445–07017	45 – 6

PART NO. CODIGO Nº	REF. NO.
90445–07017	45 – 17
90445–070F1	27 – 31
90445–070F1	14 – 2
90445–15M03	7 – 19
90447–07013	45 – 7
	45 – 18
90450–22M14	8 – 6
90462–06013	6 – 39
90462–10023	8 – 7
90462–12013	21 – 25
90464–05141	16 – 16
90464–07M41	16 – 11
90464–09M31	9 – 19
90464–11012	9 – 21
90464–12002	12 – 20
90464–12017	16 – 23
90464–12224	18 – 26
90464–13249	21 – 19
90464–13M34	13 – 18
90464–15007	3 – 32
90464–18004	21 – 24
90464–18246	21 – 23
90464–20006	8 – 9
90464–20258	20 – 29
90464–23199	17 – 18
90464–26001	12 – 19
	18 – 27
90465–08M63	23 – 24
90465–11M10	6 – 26
	9 – 24
	13 – 36
	21 – 10
	21 – 16
	23 – 18
	24 – 5
	27 – 30
	38 – 17
	42 – 10
	45 – 5
	45 – 16
90465–13M18	17 – 19
90465–13M30	20 – 3
90467–09M09	9 – 23
	12 – 23
90467–15M14	3 – 31
	3 – 33
90468–18008	22 – 6
	22 – 15

PART NO. CODIGO Nº	REF. NO.
90468–18008	22 – 36
90480–06M19	14 – 4
	16 – 19
90480–10627	17 – 17
90480–10M23	9 – 4
	13 – 15
90480–12314	5 – 27
90480–13M24	21 – 6
90480–15M31	15 – 19
90480–20M05	6 – 8
90480–22M81	20 – 20
90501–12082	22 – 27
90501–16M11	6 – 7
90501–16M37	29 – 51
	31 – 52
90506–16003	23 – 36
90506–16M39	7 – 18
90506–22001	20 – 17
90508–20M31	22 – 29
90560–12M01	33 – 4
91318–04025	25 – 55
91318–05025	25 – 57
91318–05040	25 – 41
91490–40030	30 – 22
	32 – 22
91609–16012	25 – 12
91690–30010	22 – 4
	22 – 25
91690–30020	23 – 35
91690–50014	8 – 4
91809–08006	5 – 5
91814–18002	3 – 5
	3 – 6
92780–06020	36 – 28
	37 – 28
92903–05100	40 – 11
	40 – 16
	47 – 13
92903–05600	40 – 17
92903–06600	17 – 12
92903–08100	19 – 33
92903–08600	8 – 3
	19 – 31
92907–04600	5 – 23
92990–04100	38 – 3
	38 – 7
	39 – 3
	39 – 12

PART NO. CODIGO Nº	REF. NO.
92990–05100	41 – 10
	41 – 21
	47 – 17
92990–05300	36 – 36
	37 – 36
92990–05600	41 – 22
	47 – 18
92990–06100	2 – 12
	41 – 16
92990–06300	36 – 46
	37 – 46
92990–06600	41 – 17
92990–08600	2 – 8
	35 – 38
92990–10600	18 – 12
92990–18200	30 – 20
	32 – 20
92995–06100	15 – 9
	16 – 13
92995–06600	9 – 7
	13 – 13
	15 – 10
	15 – 24
	16 – 14
	17 – 3
	18 – 6
	18 – 9
	23 – 10
	28 – 18
92995–08600	18 – 30
	23 – 14
	29 – 44
	31 – 45
92995–10100	27 – 39
	30 – 9
	32 – 9
92995–10600	27 – 40
	30 – 10
	32 – 10
92995–14600	24 – 24
	24 – 35
93101–28M16	29 – 37
	31 – 38
	49 – 17
93101–30M17	29 – 63
	31 – 66
	49 – 19
93102–38008	7 – 14

PART NO. CODIGO Nº	REF. NO.
93102–38008	48 – 13
93102–60004	4 – 3
	48 – 12
93106–09014	29 – 16
	31 – 17
	49 – 13
93106–19N50	25 – 5
93210–04279	42 – 9
93210–064A5	25 – 49
	25 – 63
93210–07003	27 – 36
	29 – 13
	31 – 14
	49 – 10
93210–07N51	25 – 54
93210–09165	22 – 19
	25 – 19
93210–11N52	25 – 18
93210–12N52	25 – 39
93210–16275	33 – 9
93210–18397	25 – 35
93210–19MJ1	6 – 32
	48 – 17
93210–19MJ3	28 – 22
	48 – 18
93210–24M79	6 – 35
	48 – 19
93210–25552	3 – 17
	28 – 19
	48 – 5
93210–25647	3 – 8
	48 – 6
93210–29375	25 – 27
93210–30682	13 – 37
93210–37160	29 – 27
	31 – 28
	49 – 15
	49 – 24
93210–37MH7	24 – 10
93210–554A9	26 – 12
93210–55M14	29 – 41
	31 – 42
	49 – 18
93210–58144	29 – 15
	31 – 16
	49 – 12
93210–68N50	25 – 15
93210–86M38	29 – 26

NUMERICAL INDEX
INDICE NUMERICO

PART NO. CODIGO Nº	REF. NO.
93210–86M38	31 – 27
	49 – 14
	49 – 23
93210–97M55	29 – 64
	31 – 67
	49 – 20
93306–209U0	29 – 59
93311–928U5	29 – 3
	31 – 3
93315–43061	29 – 62
	31 – 65
93317–330U2	29 – 38
	31 – 39
93332–00048	31 – 60
93332–000V3	29 – 4
93341–440U5	31 – 63
93341–465U4	31 – 5
93341–930V2	29 – 40
	31 – 41
93390–000U2	31 – 4
93410–16006	22 – 22
93410–22M11	23 – 39
93410–37M04	24 – 14
93420–36M01	27 – 24
93430–06024	35 – 12
	36 – 6
	37 – 6
93501–04M02	22 – 26
93501–08001	25 – 52
	25 – 64
93503–16003	25 – 44
	29 – 54
	31 – 55
93505–32038	25 – 11
	25 – 71
93507–32009	29 – 52
	31 – 53
93511–32017	29 – 53
	31 – 54
93604–29184	25 – 56
93605–10108	7 – 11
93605–17002	7 – 22
93606–12019	3 – 3
	29 – 34
	31 – 35
	49 – 28
93606–19M23	27 – 15
93608–16M16	27 – 4

PART NO. CODIGO Nº	REF. NO.
93608–16M16	27 – 22
	27 – 37
	28 – 4
	30 – 7
	32 – 7
93700–06M01	22 – 32
93700–06M03	22 – 34
	23 – 11
	23 – 25
94702–00391	1 – 5
	5 – 29
95303–05600	40 – 15
95303–05700	40 – 12
	47 – 14
95333–08600	19 – 32
95380–04600	38 – 4
	38 – 8
	39 – 4
	39 – 13
95380–05600	35 – 9
	36 – 21
	37 – 21
	41 – 11
	41 – 20
	47 – 16
95380–05700	10 – 17
95380–06600	2 – 13
	9 – 16
	21 – 3
	35 – 43
	36 – 37
	37 – 37
	41 – 15
95380–12600	23 – 44
95380–14600	24 – 23
95380–14700	33 – 16
95780–06300	42 – 14
95780–08300	2 – 10
95780–10300	24 – 7
95812–06025	28 – 11
95895–06010	23 – 40
95895–06016	8 – 18
	28 – 23
95895–06020	15 – 21
	16 – 18
95895–08012	20 – 16
97003–05012	47 – 12
97013–06020	17 – 11

PART NO. CODIGO Nº	REF. NO.
97013–08020	8 – 2
97013–08045	19 – 30
97013–08045	23 – 28
97095–06014	13 – 12
97095–06016	9 – 6
	15 – 23
	17 – 2
	18 – 5
	18 – 8
97095–06025	16 – 12
	22 – 41
	22 – 54
97095–06035	15 – 8
	22 – 47
97095–06040	28 – 17
97095–08016	18 – 29
97095–08020	23 – 13
97095–08025	29 – 43
	31 – 44
97095–10045	27 – 38
	30 – 8
	32 – 8
97303–05012	40 – 10
97380–05025	35 – 10
97380–06018	36 – 18
	37 – 18
97380–08030	35 – 37
97575–06535	22 – 24
97575–06540	6 – 33
97575–08535	27 – 14
	28 – 3
97575–08540	5 – 15
	6 – 17
	8 – 1
97575–08560	27 – 11
97575–10530	23 – 20
97575–10535	27 – 6
97575–10540	24 – 27
97575–10545	27 – 3
97595–06510	23 – 6
97595–06512	6 – 40
	18 – 10
	18 – 25
97595–06516	10 – 14
	45 – 9
	45 – 20
97595–06530	5 – 25
	23 – 4

PART NO. CODIGO Nº	REF. NO.
97595–06545	6 – 38
97595–06550	22 – 12
97595–06610	17 – 7
	17 – 10
97595–06625	25 – 42
97602–04216	26 – 9
97780–50620	17 – 30
97780–60520	21 – 17
97780–60620	17 – 6
	17 – 21
	42 – 7
97880–06035	42 – 12
97885–06012	23 – 9
97890–05016	36 – 62
	37 – 70
97890–05025	36 – 14
	37 – 14
97890–06018	36 – 45
	37 – 45
97980–06216	27 – 26
	42 – 4
97985–04116	22 – 11
97985–06210	15 – 16
97985–06216	24 – 4
98507–04008	5 – 22
98580–04006	35 – 40
98780–05016	3 – 12
98780–05018	36 – 29
	37 – 29
98980–05010	41 – 9
98980–06020	41 – 14
99001–08600	29 – 19
	31 – 20
99530–08012	15 – 7
99530–14016	5 – 17
9E450–04533	38 – 2
	39 – 2

PART NO. CODIGO Nº	REF. NO.

PART NO. CODIGO Nº	REF. NO.